No. PE-V3300-BF-TCM-1C

TCM®

PARTS CATALOGUE

DIESEL ENGINE

① V3300-BF-TCM-1
② V3300-EBF-TCM-1
③ V3300-BF-TCM1OC

KUBOTA

E/G TYPE	APPLICABLE MODEL 適用機種	
	Model 機種名	Symbol 記号
①	FD20C6H (STD)	39A
	FD20T6H (STD)	39B
	FD25C6H (STD)	39C
	FD25T6H (STD)	39E
	FD30C6H (STD)	39F
	FD30T6H (STD)	39G
②	FD20C6H (EXA)	39A
	FD20T6H (EXA,EXE,EXN)	39B
	FD25C6H (EXA)	39C
	FD25T6H (EXA,EXE,EXN)	39E
	FD30C6H (EXA)	39F
	FD30T6H (EXA,EXE,EXN)	39G
③	FD20W6H (OC)	39H
	FD25W6H (OC)	39J
	FD30W6H (OC)	39K

TCM CORPORATION

ご使用のまえに

このパーツカタログは，TCM フォークリフト のエンジンの構成部品を収録しています。

部品ご注文について

部品ご注文の際は，必ず車両の形式・製造番号（号車），エンジンの形式・製造番号（号機），部品番号および注文数を明示してください。車両の製造番号（号車）は車両銘板に，エンジンの製造番号（号機）は，シリンダブロックに打刻しています。

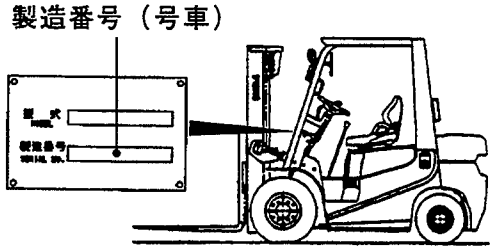

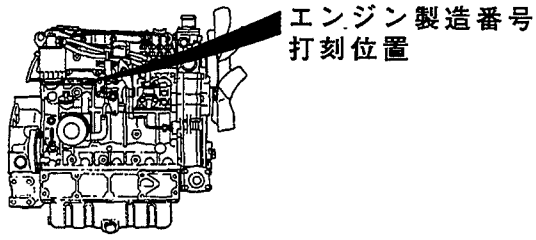

ご使用について

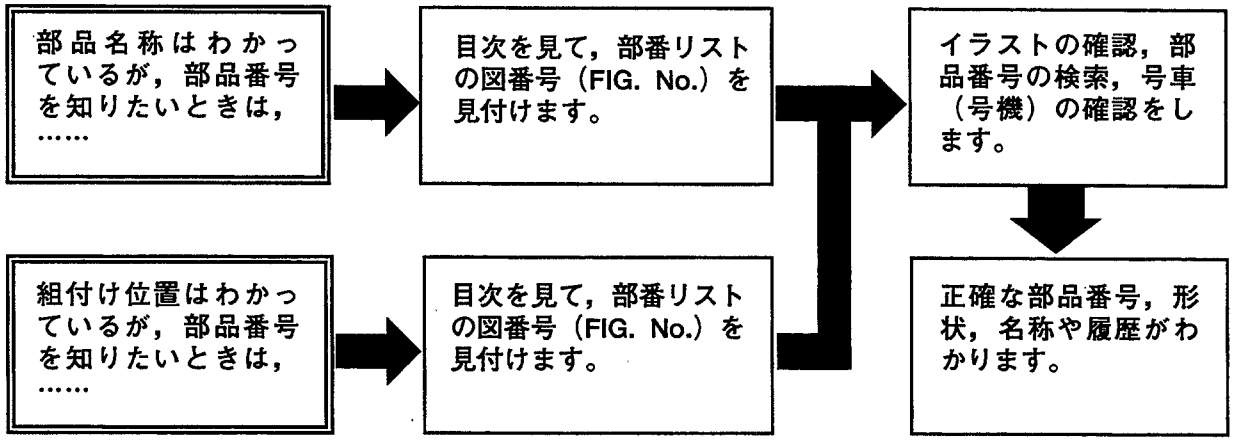

略語および記号

ＡＳＳＹ	組立品を示します。
ＲＨ	車両の前方向に向かって右側を示します。
ＬＨ	車両の前方向に向かって左側を示します。
＊	セットおよびキットの販売部品を示します。
ＳＴＤ	標準部品を示します。
t	厚みを示します。

部品は，品質向上のため予告なく変更することがありますので，あらかじめご了承ください。

INTRODUCTION

This Parts Catalogue contains the component parts of the engine mounted on **TCM FORKLIFT TRUCK**.

How to order parts

When ordering, be sure to specify the model name and serial number (machine number), engine type and serial number (engine number) of your machine, as well as the part number and desired quantity for each part. The machine serial number (machine number) is indicated on the machine name plate, the engine serial number (engine number) is punched on the cylinder block.

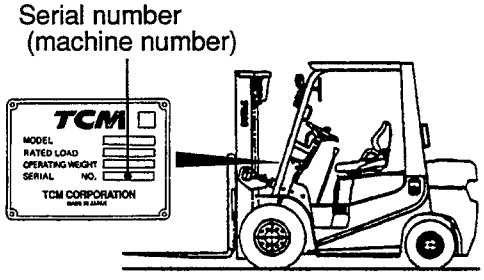

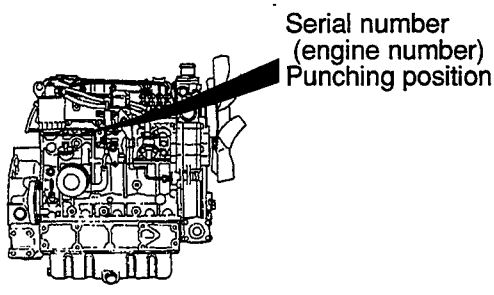

How to use the Parts Catalogue

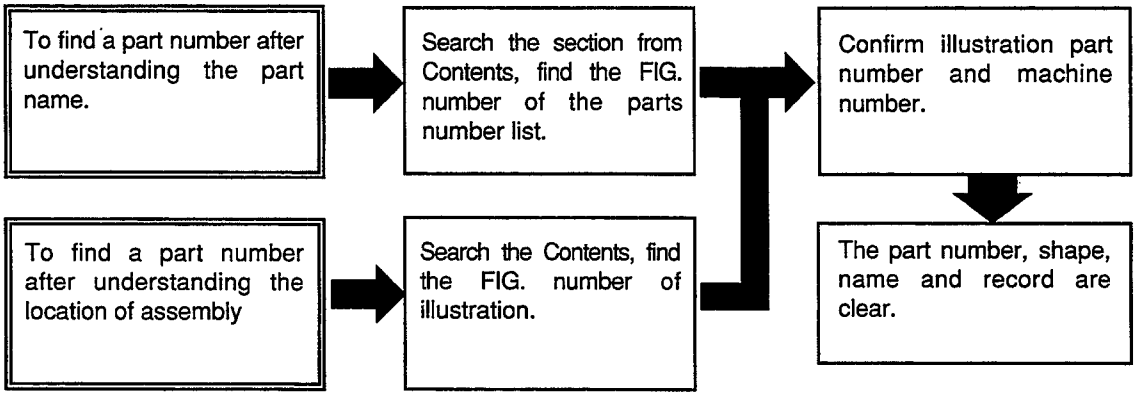

Abbreviations and symbols

ASSY ···	Assembled unit.
RH ·····	Right-hand when viewed forward on the truck.
LH ·····	Left-hand when viewed forward on the truck.
* ·····	The marketable part set or kit.
STD ·····	Standard part.
t ·····	Thickness.

Materals and specifications subject to change without notice.

E/G TYPE	APPLICABLE MODEL 適用機種	
	Model 機種名	Symbol 記号
V3300-BF-TCM-1	FD20C6H (STD)	39A
	FD20T6H (STD)	39B
	FD25C6H (STD)	39C
	FD25T6H (STD)	39E
	FD30C6H (STD)	39F
	FD30T6H (STD)	39G
V3300-EBF-TCM-1	FD20C6H (EXA)	39A
	FD20T6H (EXA,EXE,EXN)	39B
	FD25C6H (EXA)	39C
	FD25T6H (EXA,EXE,EXN)	39E
	FD30C6H (EXA)	39F
	FD30T6H (EXA,EXE,EXN)	39G
V3300-BF-TCM1OC	FD20W6H (OC)	39H
	FD25W6H (OC)	39J
	FD30W6H (OC)	39K

CONTENTS
目　　次

A: V3300-BF-TCM-1　　B: V3300-BF-TCM1OC　　C: V3300-EBF-TCM-1

SECTION	部　門	FIG.No. 図番号
UPPER OVERHAUL GASKET KIT (A&C)	ｱｯﾊﾟｵｰﾊﾞﾎｰﾙｶﾞｽｹｯﾄｷｯﾄ	1
LOWER OVERHAUL GASKET KIT (A&C)	ﾛｱｰｵｰﾊﾞﾎｰﾙｶﾞｽｹｯﾄｷｯﾄ	2
ENGINE BODY	エンジン本体	
CRANKCASE	クランクケース	3
PISTON & CRANKSHAFT	ピストン＆クランクシャフト	4
FLYWHEEL	フライホイール	5
GEAR CASE	ギヤーケース	6
OIL PAN	オイルパン	7
BALANCER	バランサ	8
HEAD & VALVE MECHANISM	ヘッド＆バルブメカニズム	
CYLINDER HEAD	シリンダヘッド	9
CYLINDER HEAD COVER	シリンダヘッドカバー	10
CAMSHAFT & IDLE GEAR SHAFT	カムシャフト＆アイドルギヤーシャフト	11
VALVE & ROCKER ARM	バルブ＆ロッカアーム	12
INLET & EXHAUST	インレット＆エキゾースト	
MANIFOLD	マニホールド	13
INLET PIPE	インレットパイプ	14
LUBRICATION	潤滑装置	
HYDRAULIC PUMP	ハイドロリックポンプ	15
OIL COOLER	オイルクーラ	16
COOLING	冷却装置	
WATER PUMP	ウォータポンプ	17
WATER FLANGE & THERMOSTAT	ウォータフランジ＆サーモスタット	18
FAN	ファン	19
FUEL	燃料装置	
NOZZLE HOLDER & GLOW PLUG(A&B:-2Q9814)	ノズルホルダ＆グロープラグ	20
NOZZLE HOLDER & GLOW PLUG(A&B:2S0413-&C)	ノズルホルダ＆グロープラグ	20A
NOZZLE HOLDER(INNER PARTS)	ノズルホルダ（インナパーツ）	21
INJECTION PUMP MOUNT	インジェクションポンプマウント	22
INJECTION PUMP(INNER PARTS)	インジェクションポンプ（インナパーツ）	23
INJECTION PUMP HOUSING	インジェクションポンプハウジング	24
GOVERNOR	ガバナ	25
FORK LEVER (GOVERNOR)	フォークレバー（ガバナ）	26
FUEL FILTER	フューエルフィルタ	27
SEDIMENTER	セジメンタ	28
ELECTRICAL	エレクトリカル	
STARTER MOUNT	スタータマウント	29
STARTER(INNER PARTS)	スタータ（インナパーツ）	30
ALTERNATOR & PULLEY	オルタネータ＆プーリ	31
ALTERNATOR(INNER PARTS)	オルタネータ（インナパーツ）	32
PARTS NUMBER INDEX	部品番号順索引表	1～4

FIG. 1 UPPER OVERHAUL GASKET KIT (A&C)

(EKVBOH10) ｱｯﾊﾟｵｰﾊﾞﾎｰﾙｶﾞｽｹｯﾄｷｯﾄ

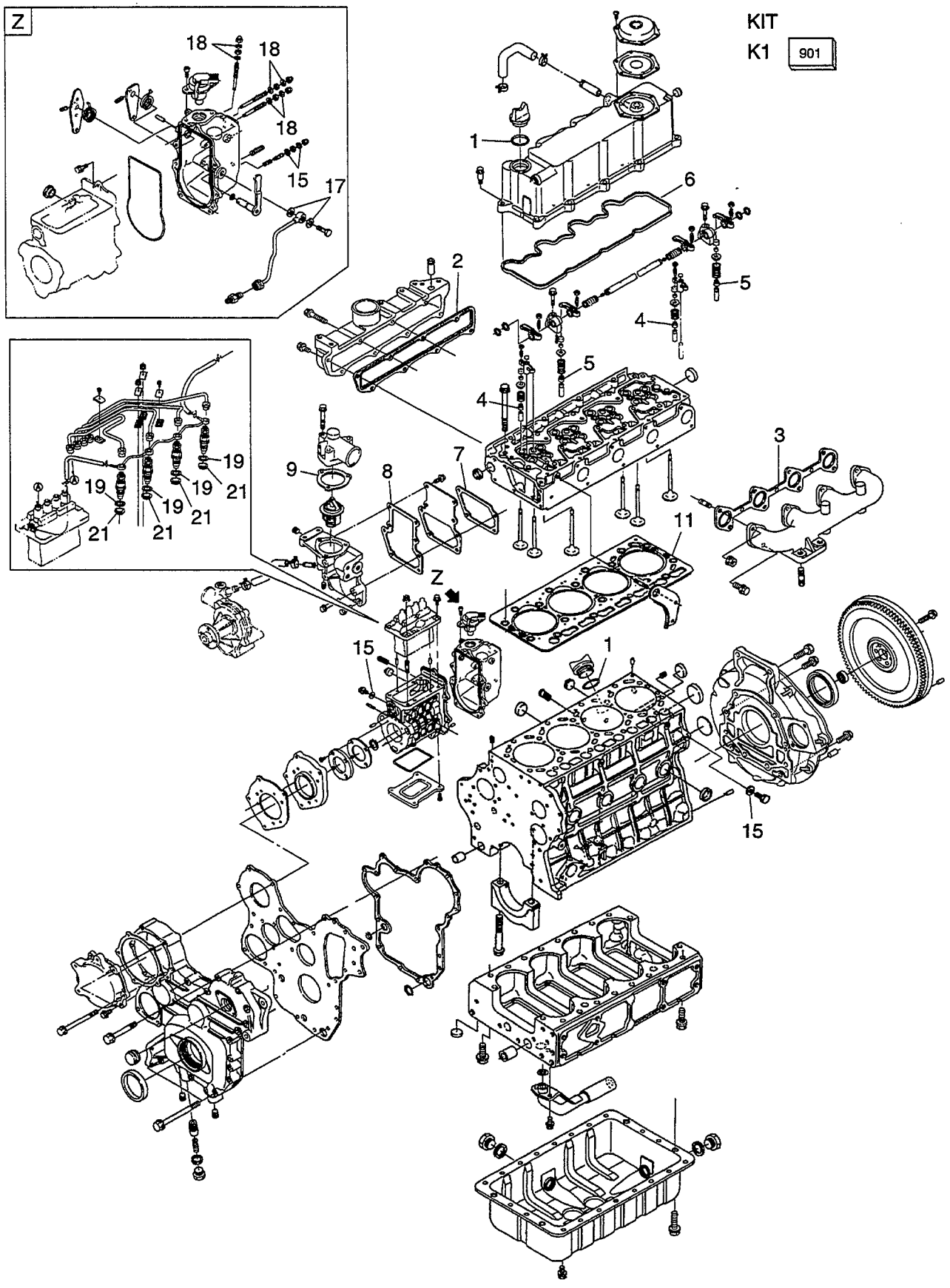

FIG.1
(EKVBOH10)

A: V3300-BF-TCM-1 B: V3300-BF-TCM1OC C: V3300-EBF-TCM-1

Item No. 見出番号	Part No. 部品番号	Mark 記号	Description 部品名称		Req'd 個数	Remarks : serial No. 備考：実施号車
901	BN-07916-27326	K1	UPPER OVERHAUL GASKET KIT	ｱｯﾊﾟｵｰﾊﾞﾎｰﾙ ｶﾞｽｹｯﾄｷｯﾄ	1	INC.1-21
1	BN-04817-50300	*	O RING	Oﾘﾝｸﾞ	1	
2	BN-1C010-11820	*	GASKET	ｶﾞｽｹｯﾄ	1	
3	BN-1C010-12352	*	GASKET	ｶﾞｽｹｯﾄ	1	
4	BN-1C010-13150	*	SEAL	ｼｰﾙ	8	
5	BN-1C010-13160	*	SEAL	ｼｰﾙ	4	
6	BN-1C010-14520	*	GASKET	ｶﾞｽｹｯﾄ	1	
7	BN-1C010-72820	*	GASKET	ｶﾞｽｹｯﾄ	1	
8	BN-1C010-72922	*	GASKET	ｶﾞｽｹｯﾄ	1	
9	BN-1C010-73270	*	GASKET	ｶﾞｽｹｯﾄ	1	
10	BN-1C011-12231	+*	GASKET	ｶﾞｽｹｯﾄ	1	
11	BN-1C020-03310	*	GASKET	ｶﾞｽｹｯﾄ	1	
12	BN-1C040-05131	+*	GASKET	ｶﾞｽｹｯﾄ	1	
13	BN-1C040-17101	+*	GASKET	ｶﾞｽｹｯﾄ	1	
14	BN-1C040-17111	+*	GASKET	ｶﾞｽｹｯﾄ	1	
15	BN-15021-33660	*	GASKET	ｶﾞｽｹｯﾄ	2	
16	BN-15109-33661	+*	PACKING	ﾊﾟｯｷﾝｸﾞ	1	
17	BN-15471-96650	*	GASKET	ｶﾞｽｹｯﾄ	2	
18	BN-15601-96650	*	GASKET	ｶﾞｽｹｯﾄ	2	
19	BN-15841-53622	*	PACKING	ﾊﾟｯｷﾝｸﾞ	4	
20	BN-16299-33672	+*	PACKING	ﾊﾟｯｷﾝｸﾞ	1	
21	BN-19077-53650	*	SEAL	ｼｰﾙ	4	

FIG. 2 LOWER OVERHAUL GASKET KIT (A&C)

(EKVBOH20) ﾛｱｰｵｰﾊﾞﾎｰﾙｶﾞｽｹｯﾄｷｯﾄ

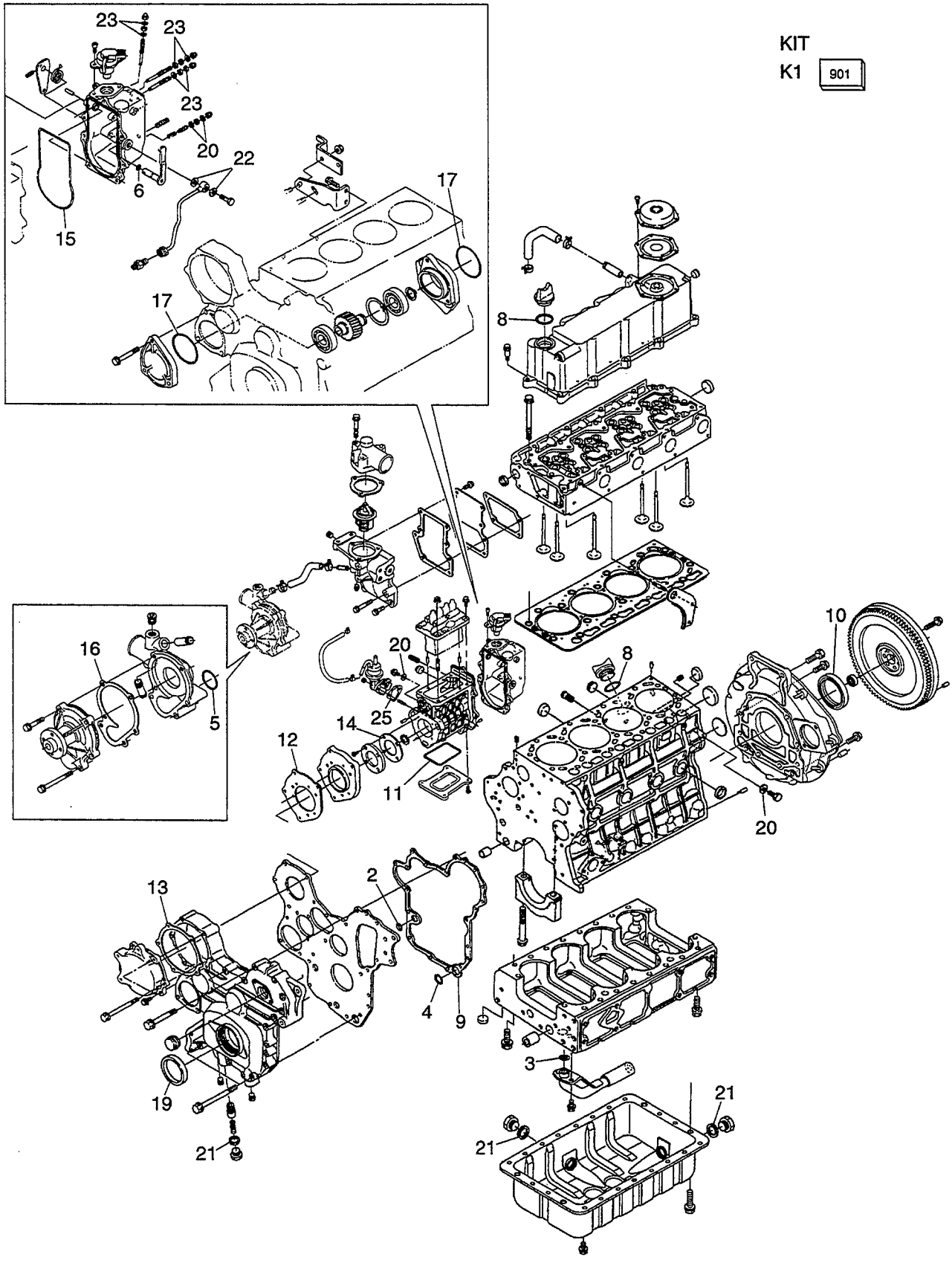

A: V3300-BF-TCM-1 B: V3300-BF-TCM1OC C: V3300-EBF-TCM-1

Item No. 見出番号	Part No. 部品番号	Mark 記号	Description 部品名称		Req'd 個数	Remarks : serial No. 備考：実施号車
901	BN-07916-27336	K1	LOWER OVERHAUL GASKET KIT	ﾛｱｰｵｰﾊﾞﾎｰﾙ ｶﾞｽｹｯﾄｷｯﾄ	1	INC.1-26
1	BN-04724-00200	+*	GASKET	ｶﾞｽｹｯﾄ	1	
2	BN-04814-00200	*	O RING	Oﾘﾝｸﾞ	1	
3	BN-04814-00220	*	O RING	Oﾘﾝｸﾞ	1	
4	BN-04814-00240	*	O RING	Oﾘﾝｸﾞ	1	
5	BN-04814-00420	*	O RING	Oﾘﾝｸﾞ	1	
6	BN-04814-10070	*	O RING	Oﾘﾝｸﾞ	2	
7	BN-04817-00160	+*	O RING	Oﾘﾝｸﾞ	1	
8	BN-04817-50300	*	O RING	Oﾘﾝｸﾞ	2	
9	BN-1C010-04130	*	GASKET	ｶﾞｽｹｯﾄ	1	
10	BN-1C010-04460	*	SEAL,OIL	ｼｰﾙ	1	
11	BN-1C010-16220	*	GASKET	ｶﾞｽｹｯﾄ	1	
12	BN-1C010-51180	*	GASKET	ｶﾞｽｹｯﾄ	1	
13	BN-1C010-51660	*	GASKET	ｶﾞｽｹｯﾄ	1	
14	BN-1C010-52130	*	GASKET	ｶﾞｽｹｯﾄ	1	
15	BN-1C010-55770	*	GASKET	ｶﾞｽｹｯﾄ	1	
16	BN-1C010-73430	*	GASKET	ｶﾞｽｹｯﾄ	1	
17	BN-1C010-96960	*	O RING	Oﾘﾝｸﾞ	2	
18	BN-1C011-43331	+*	PACKING	ﾊﾟｯｷﾝｸﾞ	1	
19	BN-1C020-04140	*	SEAL,OIL	ｼｰﾙ	1	
20	BN-15021-33660	*	GASKET	ｶﾞｽｹｯﾄ	5	
21	BN-15451-96670	*	GASKET	ｶﾞｽｹｯﾄ	3	
22	BN-15471-96650	*	GASKET	ｶﾞｽｹｯﾄ	2	
23	BN-15601-96650	*	GASKET	ｶﾞｽｹｯﾄ	18	
24	BN-15625-32893	+*	PACKING	ﾊﾟｯｷﾝｸﾞ	1	
25	BN-16264-52140	*	GASKET	ｶﾞｽｹｯﾄ	1	
26	BN-16264-88131	+*	GASKET	ｶﾞｽｹｯﾄ	1	

FIG. 3 CRANKCASE
(EKVB1210) クランクケース

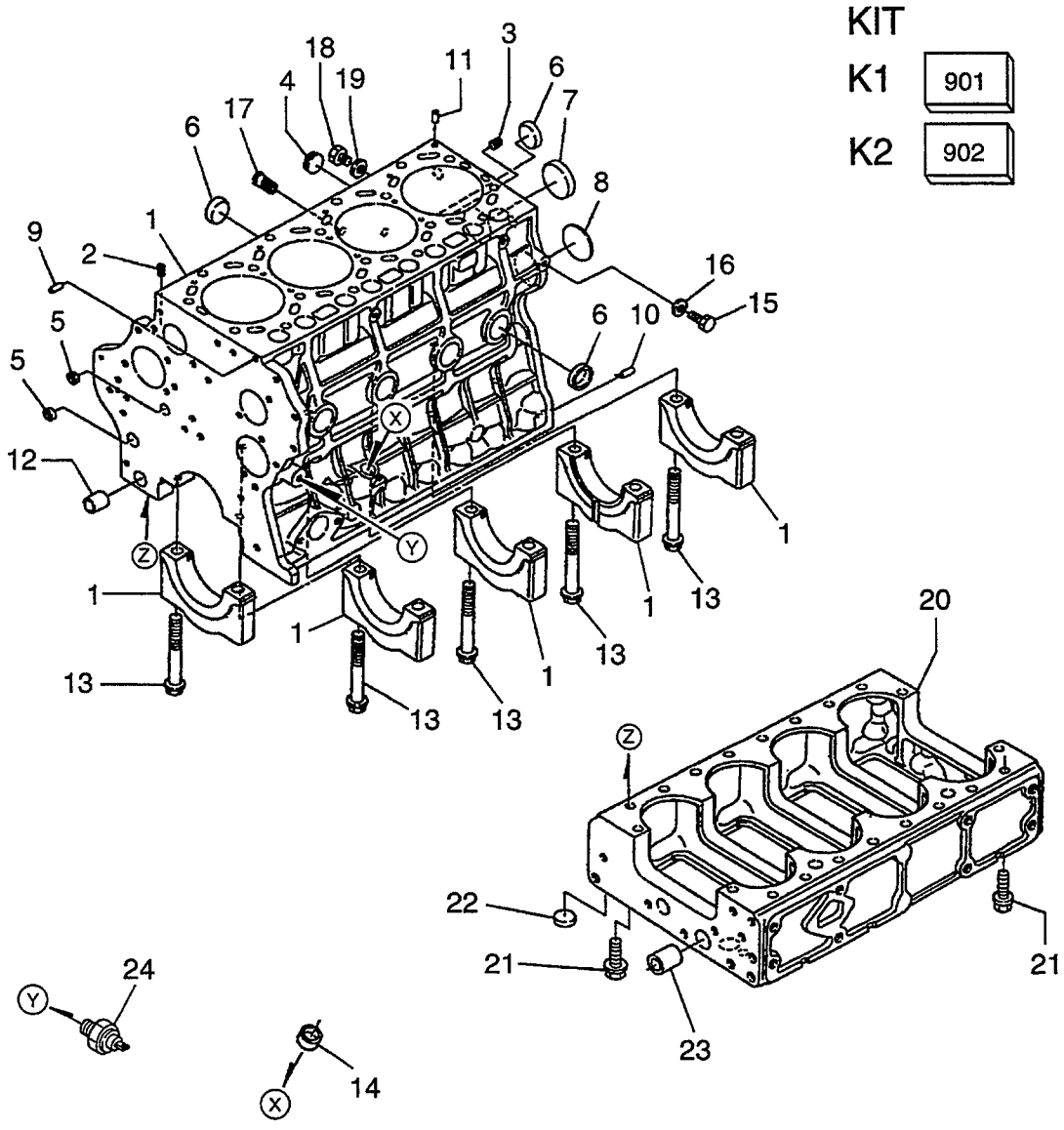

FIG.3

(EKVB1210)

A: V3300-BF-TCM-1 B: V3300-BF-TCM1OC C: V3300-EBF-TCM-1

Item No. 見出番号	Part No. 部品番号	Mark 記号	Description 部品名称		Req'd 個数	Remarks : serial No. 備考：実施号車
901	BN-07916-27326	K1	UPPER OVERHAUL GASKET KIT	ｱｯﾊﾟｵｰﾊﾞﾎｰﾙ ｶﾞｽｹｯﾄｷｯﾄ	1	A&C INC.16 & etc.
902	BN-07916-27336	K2	LOWER OVERHAUL GASKET KIT	ﾛｱｰｵｰﾊﾞﾎｰﾙ ｶﾞｽｹｯﾄｷｯﾄ	1	A&C INC.16 & etc.
1	BN-1C010-01010		CRANKCASE	ｸﾗﾝｸｹｰｽ	1	A&B&C:-2Z1646 INC.2-13
-	BN-1C010-01019		CRANKCASE	ｸﾗﾝｸｹｰｽ	1	A&B&C:3A0458- INC.2-13
2	BN-15521-96020		PLUG	ﾌﾟﾗｸﾞ	2	
3	BN-1C010-96010		PLUG	ﾌﾟﾗｸﾞ	1	
4	BN-16683-96020		PLUG	ﾌﾟﾗｸﾞ	1	
5	BN-15261-03370		CAP,SEALING	ｷｬｯﾌﾟ	4	
6	BN-15221-03380		CAP,SEALING	ｷｬｯﾌﾟ	9	
7	BN-15221-03390		CAP,SEALING	ｷｬｯﾌﾟ	1	
8	BN-1C010-96160		PLUG,EXPANSION	ﾌﾟﾗｸﾞ	1	
9	BN-05012-00820		PIN,STRAIGHT	ﾋﾟﾝ	1	
10	BN-05012-01016		PIN,STRAIGHT	ﾋﾟﾝ	4	
11	BN-15221-33650		PIN	ﾋﾟﾝ	2	
12	BN-1C010-33640		PIN	ﾋﾟﾝ	1	
13	BN-1C010-04560		BOLT	ﾎﾞﾙﾄ	10	
14	BN-15261-03370		CAP,SEALING	ｷｬｯﾌﾟ	1	
15	BN-15221-33610		PLUG	ﾌﾟﾗｸﾞ	1	
16	BN-15021-33660	*	GASKET	ｶﾞｽｹｯﾄ	1	
17	BN-1C010-37110		JOINT	ｼﾞｮｲﾝﾄ	1	A&B:-2S9683
-	BN-1C010-37114		JOINT	ｼﾞｮｲﾝﾄ	1	A&B:2U0362-, C
18	BN-06311-55030		PLUG	ﾌﾟﾗｸﾞ	1	
19	BN-04724-00170		GASKET	ｶﾞｽｹｯﾄ	1	
20	BN-1C010-01123		CRANKCASE	ｸﾗﾝｸｹｰｽ	1	
21	BN-01774-51030		BOLT	ﾎﾞﾙﾄ	16	
22	BN-15221-03380		CAP,SEALING	ｷｬｯﾌﾟ	1	
23	BN-1C010-33650		PIN	ﾋﾟﾝ	1	
24	BN-15531-39010		SWITCH,OIL	ｽｲｯﾁ	1	

FIG. 4 PISTON & CRANKSHAFT
(EKVB1220) ﾋﾟｽﾄﾝ&ｸﾗﾝｸｼｬﾌﾄ

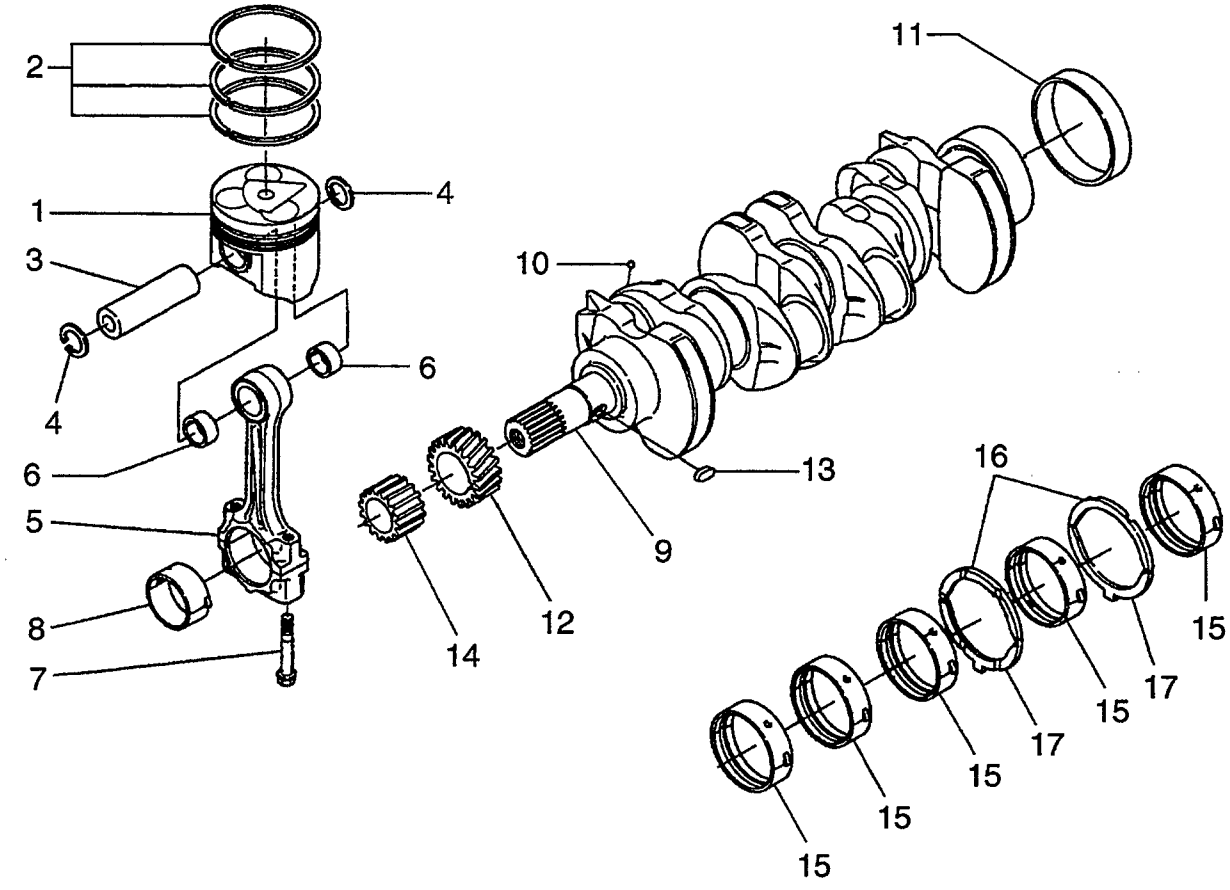

FIG.4

(EKVB1220)

A: V3300-BF-TCM-1 B: V3300-BF-TCM1OC C: V3300-EBF-TCM-1

Item No. 見出番号	Part No. 部品番号	Mark 記号	Description 部品名称		Req'd 個数	Remarks : serial No. 備考：実施号車
1	BN-1C011-21110		PISTON	ﾋﾟｽﾄﾝ	4	STD
-	BN-1C011-21910		PISTON	ﾋﾟｽﾄﾝ	4	+0.5mm
2	BN-1C011-21050		RING,PISTON	ﾘﾝｸﾞ	4	STD
-	BN-1C011-21090		RING,PISTON	ﾘﾝｸﾞ	4	+0.5mm
3	BN-1C010-21310		PIN,PISTON	ﾋﾟﾝ	4	
4	BN-04611-00300		CIRCLIP	ｻｰｸﾘｯﾌﾟ	8	
5	BN-1C020-22014		ROD,CONNECTING	ﾛｯﾄﾞ	4	INC.6-8
6	BN-1C010-21980		BUSHING	ﾌﾞｯｼﾝｸﾞ	8	
7	BN-1C010-22140		BOLT	ﾎﾞﾙﾄ	8	
8	BN-1C020-22312		METAL,CRANKPIN	ﾒﾀﾙ	4	STD
-	BN-1C020-22962		METAL,CRANKPIN	ﾒﾀﾙ	4	-0.2mm
-	BN-1C020-22972		METAL,CRANKPIN	ﾒﾀﾙ	4	-0.4mm
9	BN-1C020-23012		CRANKSHAFT	ｸﾗﾝｸｼｬﾌﾄ	1	INC.10-14
10	BN-07715-00401		BALL	ﾎﾞｰﾙ	4	A:-107962
12	BN-1C010-24112		GEAR	ｷﾞﾔｰ	1	
13	BN-05712-00515		KEY,FEATHER	ｷｰ	1	
14	BN-1C010-35630		GEAR,OIL PUMP	ｷﾞﾔｰ	1	
15	BN-1C020-23470		METAL SET,CRANKSHAFT	ﾒﾀﾙｾｯﾄ	5	STD
-	BN-1C020-23910		METAL SET,CRANKSHAFT	ﾒﾀﾙｾｯﾄ	5	-0.2mm
-	BN-1C020-23920		METAL SET,CRANKSHAFT	ﾒﾀﾙｾｯﾄ	5	-0.4mm
16	BN-1C010-23530		METAL,SIDE	ﾒﾀﾙ	2	STD
-	BN-1C010-23950		METAL,SIDE	ﾒﾀﾙ	2	+0.2mm
-	BN-1C010-23960		METAL,SIDE	ﾒﾀﾙ	2	+0.4mm
17	BN-1C010-23540		METAL	ﾒﾀﾙ	2	STD
-	BN-1C010-23970		METAL	ﾒﾀﾙ	2	+0.2mm
-	BN-1C010-23980		METAL	ﾒﾀﾙ	2	+0.4mm

FIG. 5 FLYWHEEL
(EKVB1230) フライホイール

KIT

K1 901

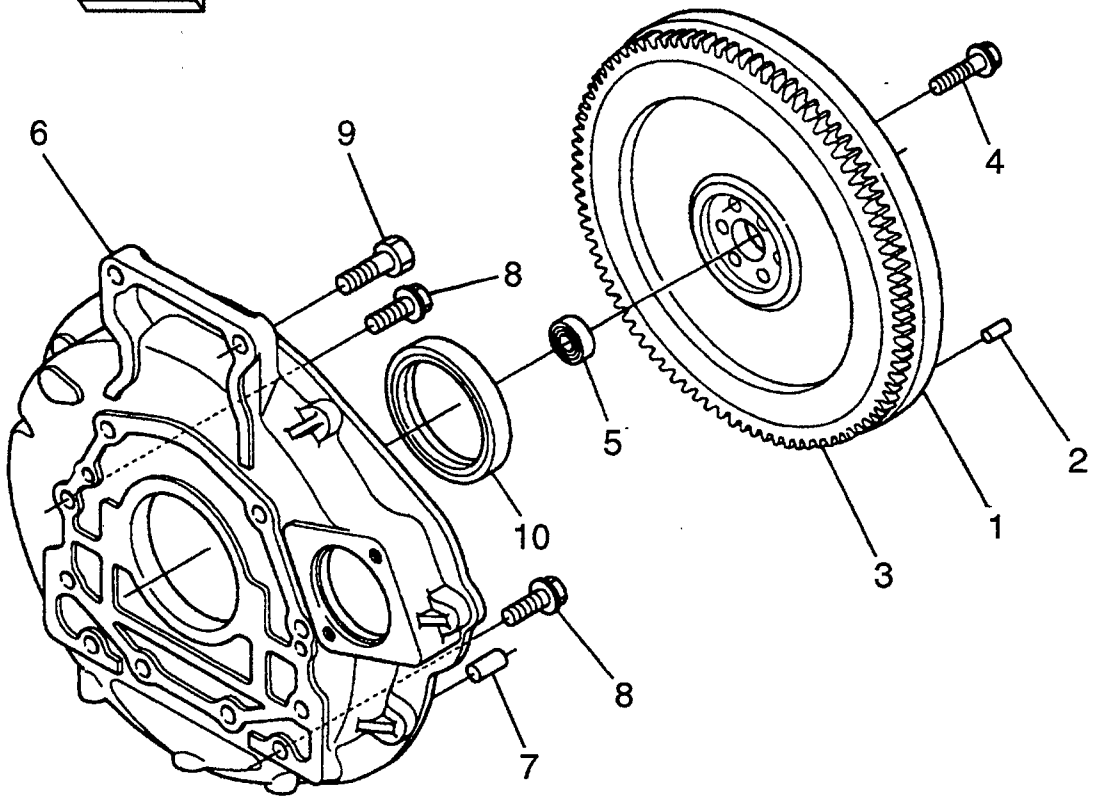

FIG.5
(EKVB1230)

A: V3300-BF-TCM-1 B: V3300-BF-TCM1OC C: V3300-EBF-TCM-1

Item No. 見出番号	Part No. 部品番号	Mark 記号	Description 部品名称		Req'd 個数	Remarks : serial No. 備考：実施号車
901	BN-07916-27336	K1	LOWER OVERHAUL GASKET KIT	ﾛｱｰｵｰﾊﾞﾎｰﾙ ｶﾞｽｹｯﾄｷｯﾄ	1	A&C INC.10 & etc.
1	BN-1K012-25010		FLYWHEEL	ﾌﾗｲﾎｲｰﾙ	1	A:-1W7477 INC.3
-	BN-1K012-25012		FLYWHEEL	ﾌﾗｲﾎｲｰﾙ	1	A:1Y0328-, B&C INC.2,3
2	BN-05012-00616		PIN	ﾋﾟﾝ	2	A:1Y0328-, B&C
3	BN-15602-63820		GEAR,RING	ｷﾞﾔｰ	1	-
4	BN-15321-25163		BOLT	ﾎﾞﾙﾄ	7	
5	BN-08143-06302		BEARING,BALL	ﾍﾞｱﾘﾝｸﾞ	1	
6	BN-1K012-04610		HOUSING	ﾊｳｼﾞﾝｸﾞ	1	
7	BN-68849-66430		PIN	ﾋﾟﾝ	2	
8	BN-01774-51230		BOLT	ﾎﾞﾙﾄ	10	
9	BN-01779-51445		BOLT	ﾎﾞﾙﾄ	2	
10	BN-1C010-04460	*	SEAL,OIL	ｼｰﾙ	1	A&C
-	BN-1K012-04460		SEAL,OIL	ｼｰﾙ	1	B

FIG. 6 GEAR CASE
(EKVB1240) ｷﾞﾔｰｹｰｽ

KIT

K1 901

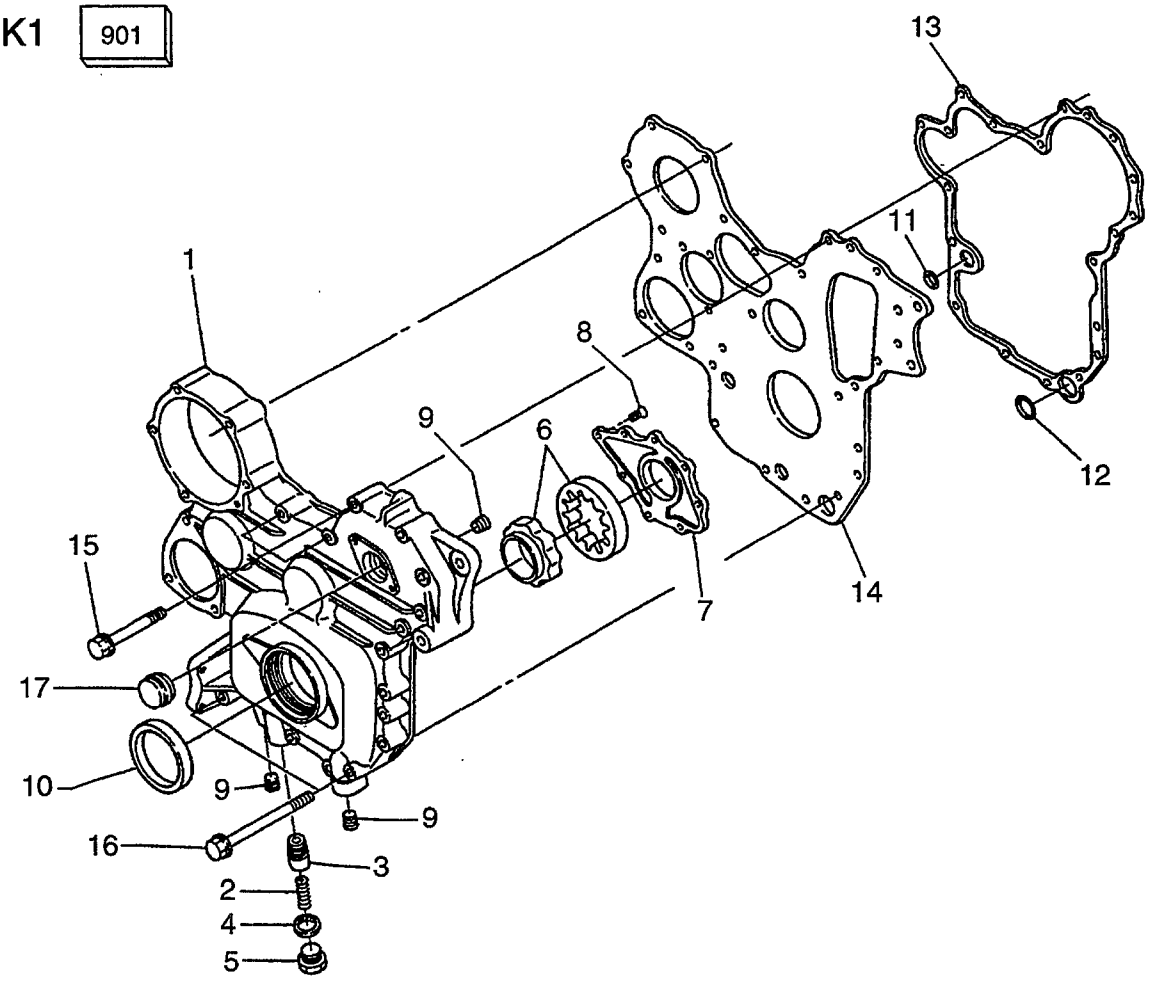

A: V3300-BF-TCM-1 B: V3300-BF-TCM1OC C: V3300-EBF-TCM-1

Item No. 見出番号	Part No. 部品番号	Mark 記号	Description 部品名称		Req'd 個数	Remarks : serial No. 備考：実施号車
901	BN-07916-27336	K1	LOWER OVERHAUL GASKET KIT	ﾛｱｰｵｰﾊﾞﾎｰﾙ ｶﾞｽｹｯﾄｷｯﾄ	1	A&C INC.4,10-13 & etc.
1	BN-1C010-04014		CASE,GEAR	ｹｰｽ	1	A&B:-2P2016 INC.2-9
-	BN-1C010-04017		CASE,GEAR	ｹｰｽ	1	A&B:2Q0247-, C INC.2-9
2	BN-1C010-36950		SPRING	ｽﾌﾟﾘﾝｸﾞ	1	
3	BN-1C010-36920		VALVE,RELIEF	ﾊﾞﾙﾌﾞ	1	A&B:-2P2016
-	BN-1C010-36922		VALVE,RELIEF	ﾊﾞﾙﾌﾞ	1	A&B:2Q0247-, C
4	BN-15451-96670	*	GASKET	ｶﾞｽｹｯﾄ	1	
5	BN-1C010-36960		PLUG	ﾌﾟﾗｸﾞ	1	
6	BN-1C010-35070		ROTOR,OIL PUMP	ﾛｰﾀ	1	
7	BN-1C010-35130		COVER	ｶﾊﾞｰ	1	
8	BN-03016-50616		SCREW	ｽｸﾘｭ	8	
9	BN-1C010-96020		PLUG	ﾌﾟﾗｸﾞ	3	
10	BN-1C020-04140	*	SEAL,OIL	ｼｰﾙ	1	
11	BN-04814-00200	*	O RING	Oﾘﾝｸﾞ	1	
12	BN-04814-00240	*	O RING	Oﾘﾝｸﾞ	1	
13	BN-1C010-04130	*	GASKET	ｶﾞｽｹｯﾄ	1	
14	BN-1C010-04162		PLATE	ﾌﾟﾚｰﾄ	1	
15	BN-01754-50855		BOLT	ﾎﾞﾙﾄ	13	
16	BN-01754-50875		BOLT	ﾎﾞﾙﾄ	2	
17	BN-16264-83342		COVER	ｶﾊﾞｰ	1	

FIG. 7 OIL PAN
(EKVB1250) オイルパン

KIT

K1 901

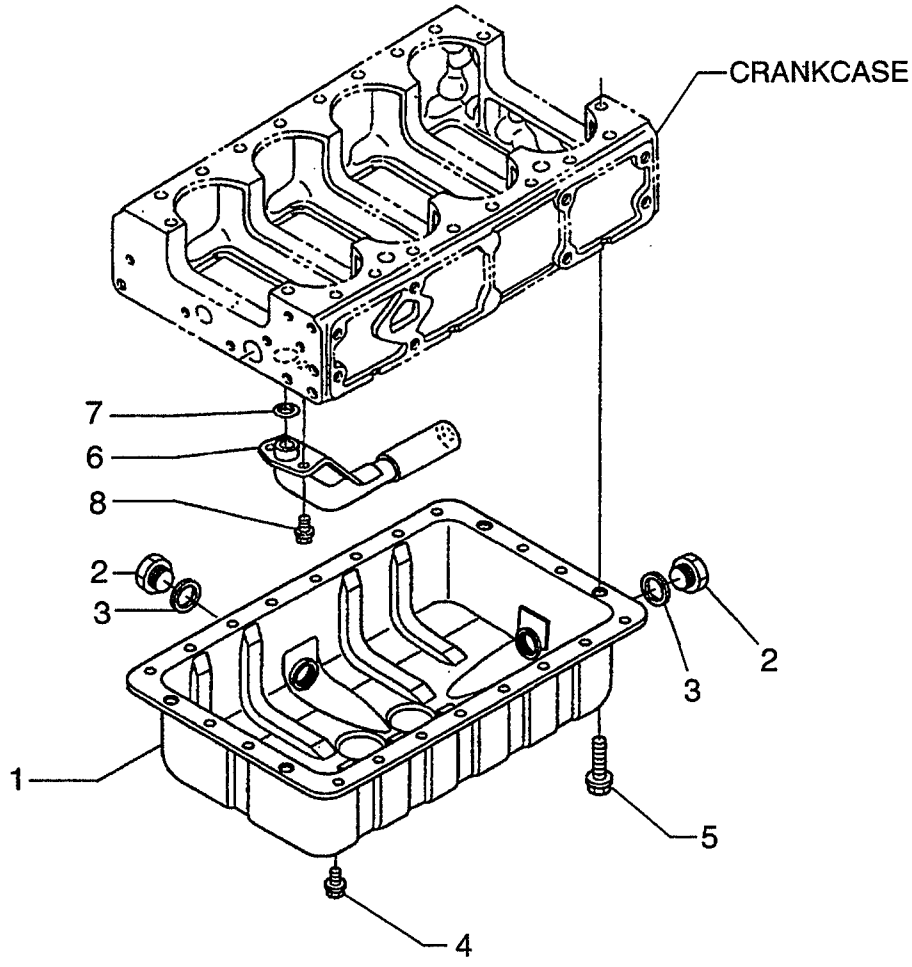

A: V3300-BF-TCM-1 B: V3300-BF-TCM1OC C: V3300-EBF-TCM-1

Item No. 見出番号	Part No. 部品番号	Mark 記号	Description 部品名称		Req'd 個数	Remarks : serial No. 備考：実施号車
901	BN-07916-27336	K1	LOWER OVERHAUL GASKET KIT	ﾛｱｰｵｰﾊﾞﾎｰﾙ ｶﾞｽｹｯﾄｷｯﾄ	1	A&C INC.3,7 & etc.
1	BN-1C010-01503		PAN,OIL	ﾊﾟﾝ	1	
2	BN-15707-33750		PLUG	ﾌﾟﾗｸﾞ	2	
3	BN-15451-96670	*	GASKET	ｶﾞｽｹｯﾄ	2	
4	BN-01774-51014		BOLT	ﾎﾞﾙﾄ	20	A&B:-2S9683
-	BN-1C010-91100		BOLT	ﾎﾞﾙﾄ	20	A&B:2U0362-, C
5	BN-01774-51004		BOLT	ﾎﾞﾙﾄ	4	
6	BN-1C010-32110		FILTER,OIL	ﾌｨﾙﾀ	1	
7	BN-04814-00220	*	O RING	Oﾘﾝｸﾞ	1	
8	BN-01754-50814		BOLT	ﾎﾞﾙﾄ	2	

FIG. 8 BALANCER
(EKVB1260) ﾊﾞﾗﾝｻ

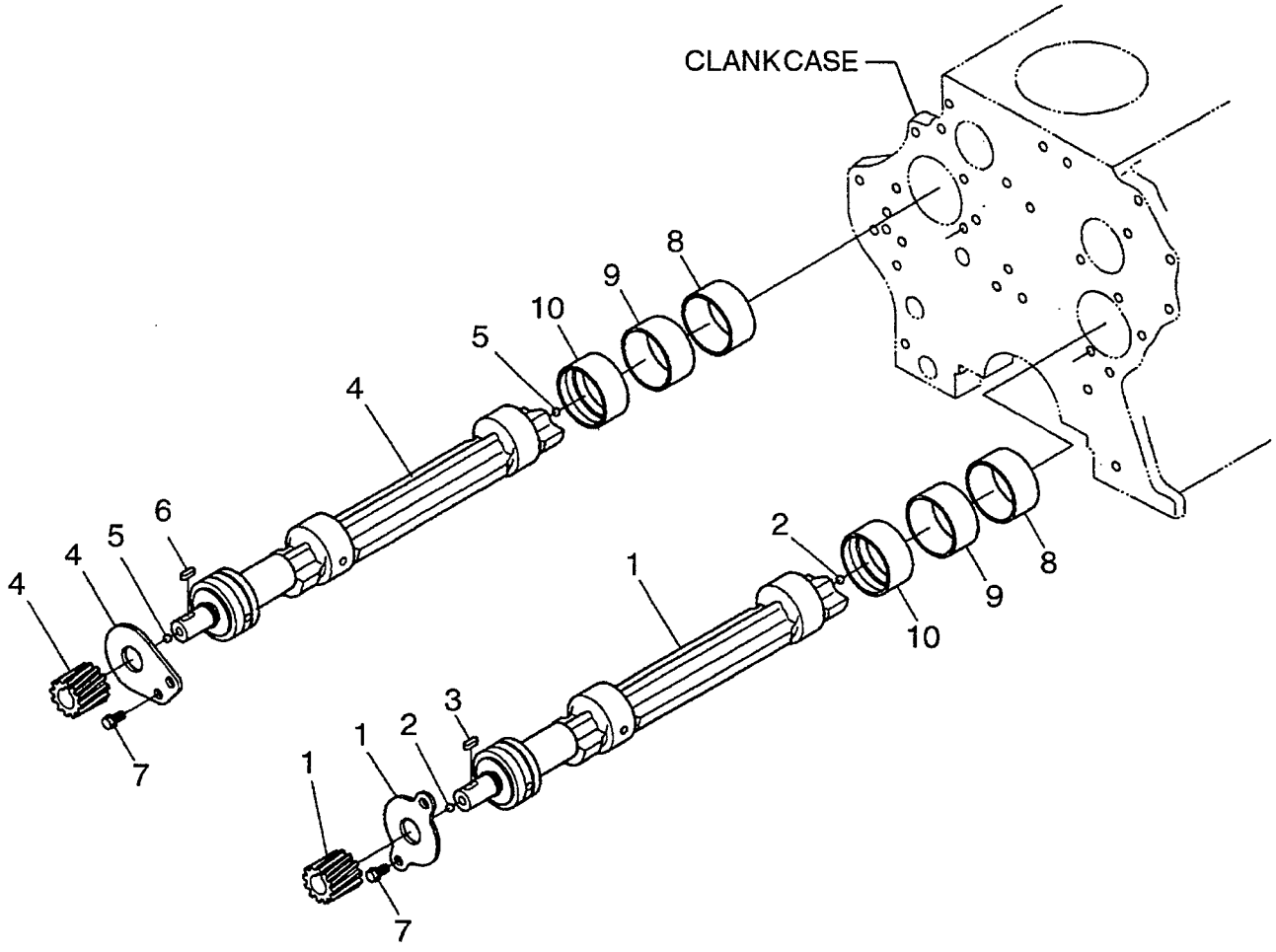

FIG.8

(EKVB1260)

A: V3300-BF-TCM-1 B: V3300-BF-TCM1OC C: V3300-EBF-TCM-1

Item No. 見出番号	Part No. 部品番号	Mark 記号	Description 部品名称		Req'd 個数	Remarks : serial No. 備考：実施号車
1	BN-1C011-26300		SHAFT,BALANCER	ｼｬﾌﾄ	1	A&B&C:-2X0970 INC.2,3
-	BN-1C011-26302		SHAFT,BALANCER	ｼｬﾌﾄ	1	A&B&C:2Y0445- INC.2,3
2	BN-07715-00401		BALL	ﾎﾞｰﾙ	2	
3	BN-05712-00415		KEY,FEATHER	ｷｰ	1	
4	BN-1C011-26400		SHAFT,BALANCER	ｼｬﾌﾄ	1	A&B&C:-2X0970 INC.5,6
-	BN-1C011-26402		SHAFT,BALANCER	ｼｬﾌﾄ	1	A&B&C:2Y0445- INC.5,6
5	BN-07715-00401		BALL	ﾎﾞｰﾙ	2	
6	BN-05712-00415		KEY,FEATHER	ｷｰ	1	
7	BN-01754-50814		BOLT	ﾎﾞﾙﾄ	4	
8	BN-1C011-26970		METAL	ﾒﾀﾙ	2	
9	BN-1C011-26980		METAL	ﾒﾀﾙ	2	A&B&C:-2X0970
10	BN-1C011-26990		METAL	ﾒﾀﾙ	2	

FIG. 9 CYLINDER HEAD
(EKVB1310) シリンダヘッド

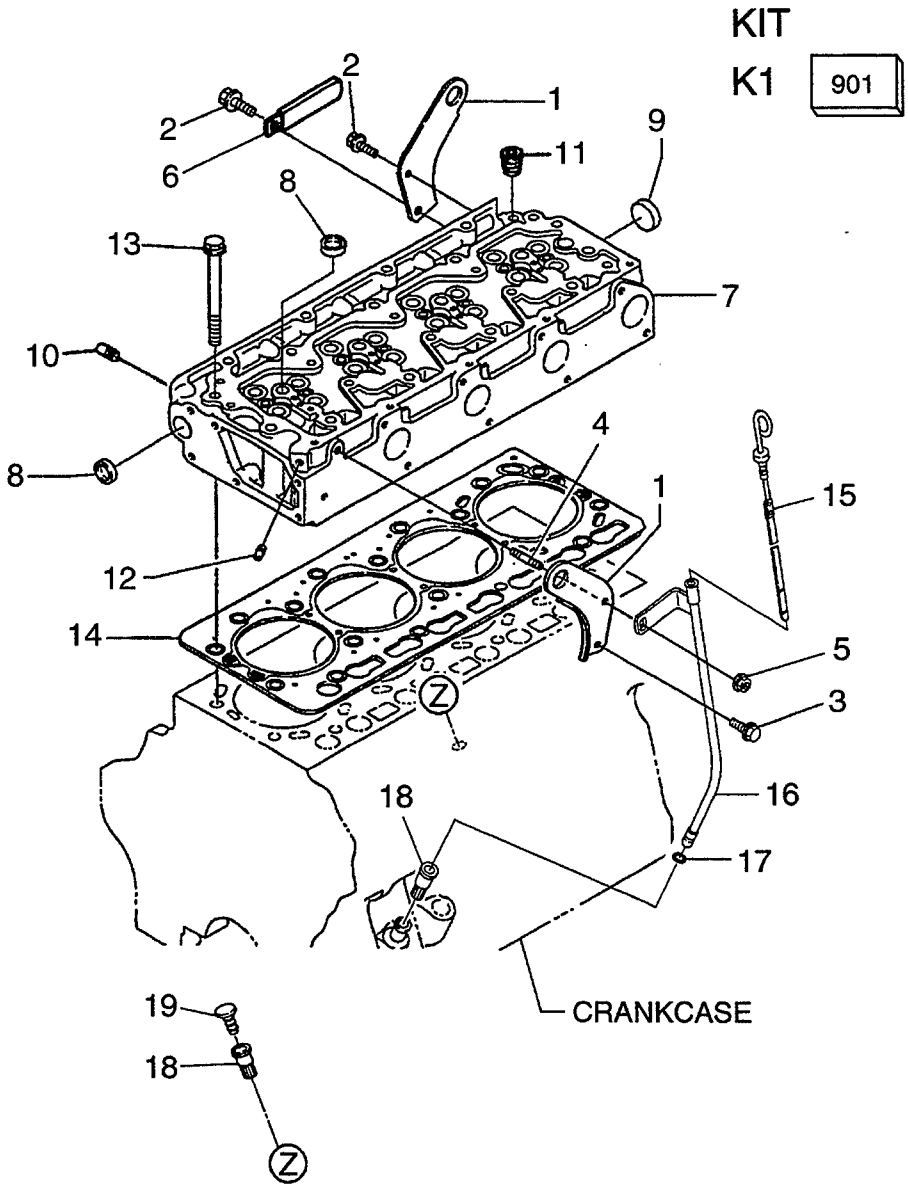

FIG.9

(EKVB1310)

A: V3300-BF-TCM-1 B: V3300-BF-TCM1OC C: V3300-EBF-TCM-1

Item No. 見出番号	Part No. 部品番号	Mark 記号	Description 部品名称		Req'd 個数	Remarks : serial No. 備考：実施号車
901	BN-07916-27326	K1	UPPER OVERHAUL GASKET KIT	ｱｯﾊﾟｵｰﾊﾞﾎｰﾙ ｶﾞｽｹｯﾄｷｯﾄ	1	A&C INC.14 & etc.
1	BN-15471-01740		HOOK,ENGINE	ﾌｯｸ	2	
2	BN-01754-50814		BOLT	ﾎﾞﾙﾄ	2	
3	BN-01754-50820		BOLT	ﾎﾞﾙﾄ	1	
4	BN-15221-91530		STUD	ｽﾀｯﾄﾞ	1	
5	BN-02751-50080		NUT	ﾅｯﾄ	1	
6	BN-12234-67580		CLAMP	ｸﾗﾝﾌﾟ	1	
7	BN-1C010-03023		HEAD,CYLINDER	ﾍｯﾄﾞ	1	INC.8-11, FIG.12-ITEM 1-13
8	BN-15221-03370		CAP,SEALING	ｷｬｯﾌﾟ	5	
9	BN-15221-03490		CAP,SEALING	ｷｬｯﾌﾟ	1	
10	BN-15261-96010		PLUG	ﾌﾟﾗｸﾞ	4	
11	BN-15521-96020		PLUG	ﾌﾟﾗｸﾞ	1	
12	BN-15841-96020		PLUG	ﾌﾟﾗｸﾞ	1	
13	BN-1C010-03450		BOLT	ﾎﾞﾙﾄ	18	
14	BN-1C020-03310	*	GASKET	ｶﾞｽｹｯﾄ	1	0.80mm
-	BN-1C020-03600		GASKET	ｶﾞｽｹｯﾄ	1	0.90mm
-	BN-1C020-03610		GASKET	ｶﾞｽｹｯﾄ	1	0.95mm
15	BN-1K011-36410		GAUGE,OIL	ｹﾞｰｼﾞ	1	
16	BN-1K011-36500		GUIDE	ｶﾞｲﾄﾞ	1	INC.17
17	BN-04814-00090		O RING	Oﾘﾝｸﾞ	1	
18	BN-1C010-36422		GUIDE	ｶﾞｲﾄﾞ	2	
19	BN-1C010-36550		PLUG	ﾌﾟﾗｸﾞ	1	

FIG. 10 CYLINDER HEAD COVER
(EKVB1320) シリンダヘッドカバー

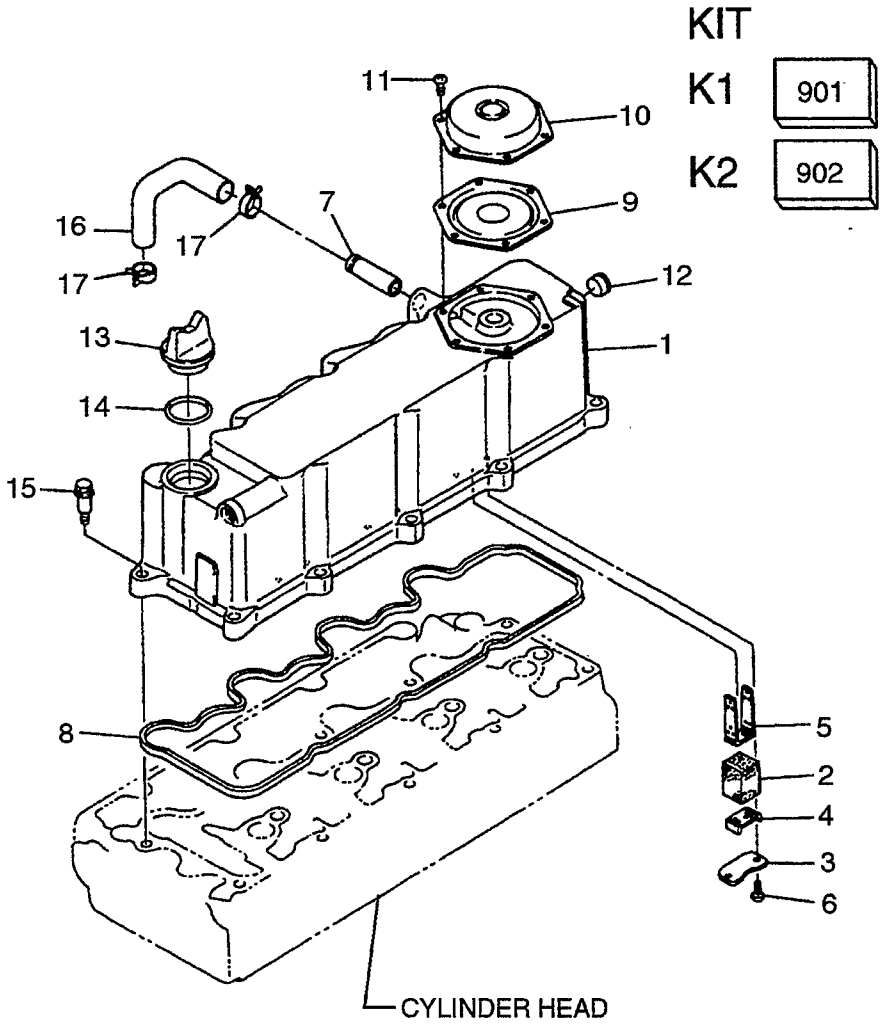

FIG.10

(EKVB1320)

A: V3300-BF-TCM-1 B: V3300-BF-TCM1OC C: V3300-EBF-TCM-1

Item No. 見出番号	Part No. 部品番号	Mark 記号	Description 部品名称		Req'd 個数	Remarks : serial No. 備考：実施号車
901	BN-07916-27326	K1	UPPER OVERHAUL GASKET KIT	ｱｯﾊﾟｰｵｰﾊﾞｰﾎｰﾙ ｶﾞｽｹｯﾄｷｯﾄ	1	A&C INC.8,14 & etc.
902	BN-07916-27336	K2	LOWER OVERHAUL GASKET KIT	ﾛｱｰｵｰﾊﾞｰﾎｰﾙ ｶﾞｽｹｯﾄｷｯﾄ	1	A&C INC.14 & etc.
1	BN-1C010-14500		COVER,CYLINDER HEAD	ｶﾊﾞｰ	1	INC.2-14
2	BN-1C010-05670		ELEMENT	ｴﾚﾒﾝﾄ	3	
3	BN-1C010-05370		SHIELD	ｼｰﾙﾄﾞ	3	
4	BN-1C010-05140		PLATE	ﾌﾟﾚｰﾄ	3	
5	BN-1C010-05150		PLATE	ﾌﾟﾚｰﾄ	3	
6	BN-03054-50408		SCREW	ｽｸﾘｭ	6	
7	BN-16241-05550		JOINT	ｼﾞｮｲﾝﾄ	1	
8	BN-1C010-14520	*	GASKET	ｶﾞｽｹｯﾄ	1	
9	BN-1C010-05200		VALVE	ﾊﾞﾙﾌﾞ	1	
10	BN-1C010-05120		COVER	ｶﾊﾞｰ	1	
11	BN-03054-50508		SCREW	ｽｸﾘｭ	6	
12	BN-06311-85016		CAP,SEALING	ｷｬｯﾌﾟ	2	
13	BN-15852-33140		PLUG,OIL FILLER	ﾌﾟﾗｸﾞ	1	A&B:-2K0994
-	BN-E9151-33140		PLUG,OIL FILLER	ﾌﾟﾗｸﾞ	1	A&B:2L0461-, C
14	BN-04811-50300		O RING	Oﾘﾝｸﾞ	1	A&B:-2K0994
-	BN-04817-50300	*	O RING	Oﾘﾝｸﾞ	1	A&B:2L0461-, C
15	BN-1C010-91020		BOLT	ﾎﾞﾙﾄ	10	
16	BN-1C010-05510		TUBE	ﾁｭｰﾌﾞ	1	
17	BN-16241-33510		BAND	ﾊﾞﾝﾄﾞ	2	

FIG. 11 CAMSHAFT & IDLE GEAR SHAFT
(EKVB1330) カムシャフト&アイドルギヤーシャフト

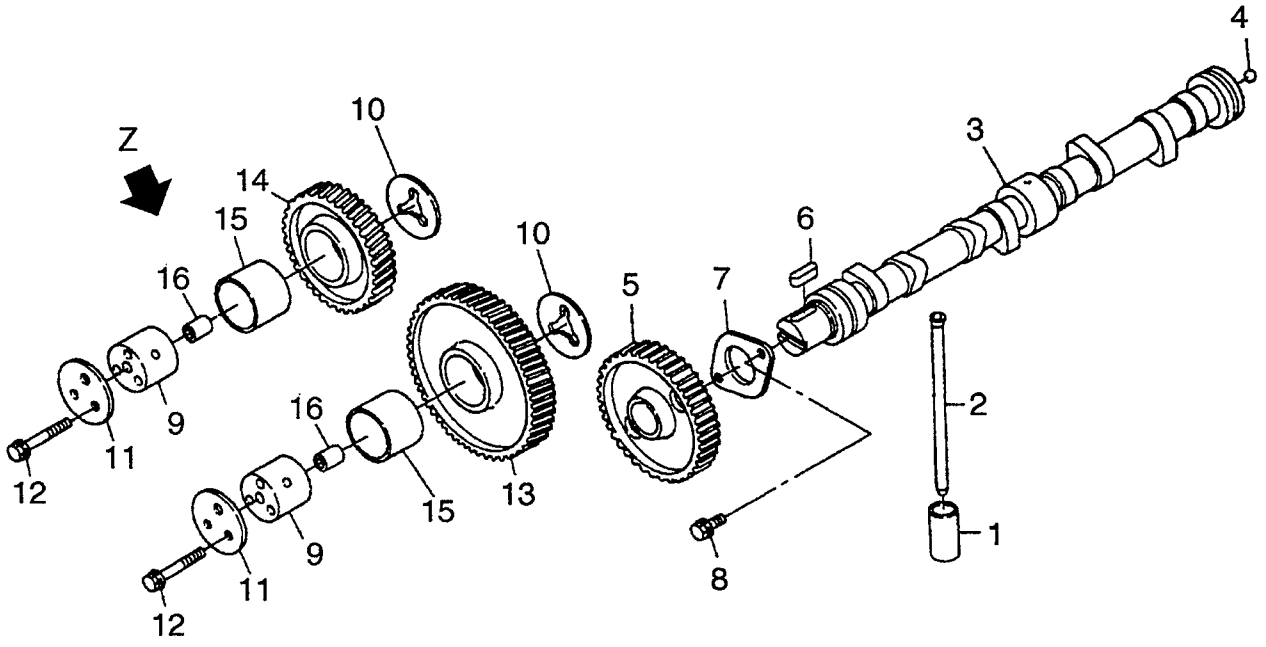

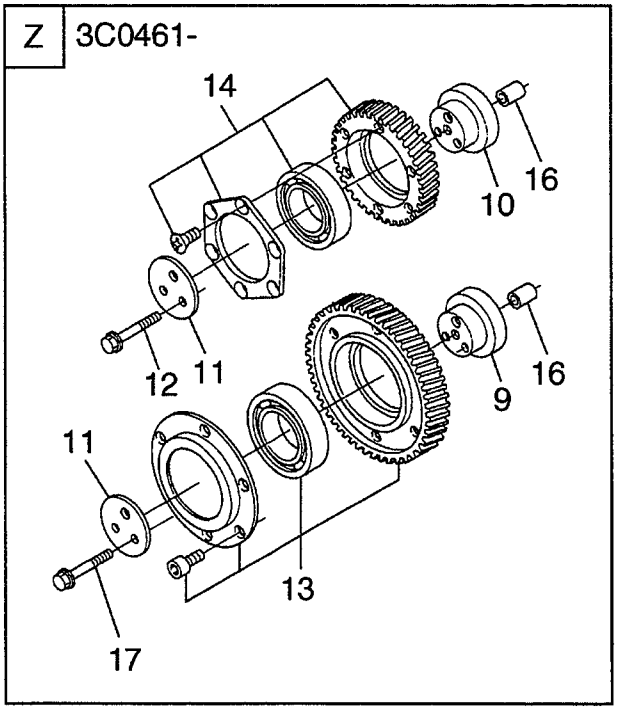

A: V3300-BF-TCM-1 B: V3300-BF-TCM1OC C: V3300-EBF-TCM-1

Item No. 見出番号	Part No. 部品番号	Mark 記号	Description 部品名称		Req'd 個数	Remarks : serial No. 備考：実施号車
1	BN-15601-15550		TAPPET	ﾀﾍﾟｯﾄ	8	
2	BN-1C010-15110		ROD,PUSH	ﾛｯﾄﾞ	8	
3	BN-1C010-16012		CAMSHAFT	ｶﾑｼｬﾌﾄ	1	INC.4-7
4	BN-07715-01605		BALL	ﾎﾞｰﾙ	1	
5	BN-1C010-16512		GEAR,CAM	ｷﾞﾔｰ	1	
6	BN-05712-00520		KEY,FEATHER	ｷｰ	1	
7	BN-1C010-16270		STOPPER	ｽﾄｯﾊﾟ	1	
8	BN-01754-50814		BOLT	ﾎﾞﾙﾄ	2	
9	BN-1C010-24250		SHAFT,IDLE GEAR	ｼｬﾌﾄ	2	A&B&C:-3B0113
-	BN-1K012-24250		SHAFT,IDLE GEAR	ｼｬﾌﾄ	1	A&B&C:3C0461-
10	BN-1C010-24360		COLLAR	ｶﾗｰ	2	A&B&C:-2X0970
-	BN-1K012-24360		COLLAR	ｶﾗｰ	2	A&B&C:2Y0445-3B0113
-	BN-1K012-24260		SHAFT	ｼｬﾌﾄ	1	A&B&C:3C0461-
11	BN-1C010-24370		COLLAR	ｶﾗｰ	2	A&B&C:-2X0970
-	BN-1K012-24370		COLLAR	ｶﾗｰ	2	A&B&C:2Y0445-3B0113
-	BN-1C010-24370		COLLAR	ｶﾗｰ	2	A&B&C:3C0461-
12	BN-01754-50855		BOLT	ﾎﾞﾙﾄ	6	A&B&C:-3B0113
-	BN-01754-50850		BOLT	ﾎﾞﾙﾄ	3	A&B&C:3C0461-
13	BN-1C010-24012		GEAR,IDLE	ｷﾞﾔｰ	1	A&B&C:-3B0113
						INC.15
-	BN-1K012-24010		GEAR,IDLE	ｷﾞﾔｰ	1	A&B&C:3C0461-
14	BN-1C010-24022		GEAR,IDLE	ｷﾞﾔｰ	1	A&B&C:-3B0113
						INC.15
-	BN-1K012-24020		GEAR,IDLE	ｷﾞﾔｰ	1	A&B&C:3C0461-
15	BN-1C010-24982		BUSHING	ﾌﾞｯｼﾝｸﾞ	2	A&B&C:-3B0113
16	BN-1C010-24520		PIN	ﾋﾟﾝ	2	
17	BN-E9151-91020		BOLT	ﾎﾞﾙﾄ	3	A&B&C:3C0461-

FIG. 12 VALVE & ROCKER ARM
(EKVB1340) ﾊﾞﾙﾌﾞ&ﾛｯｶｱｰﾑ

KIT

K1 901

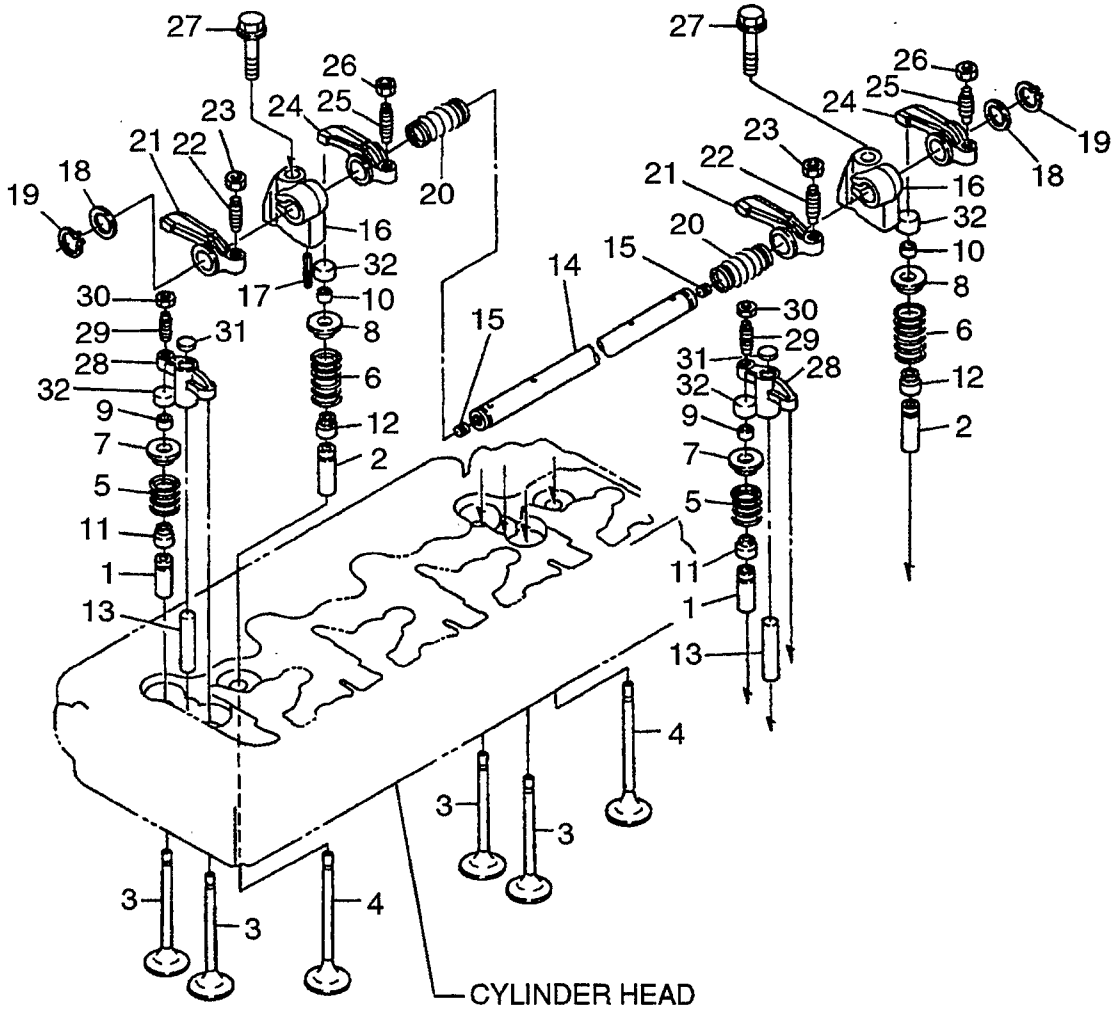

A: V3300-BF-TCM-1 B: V3300-BF-TCM1OC C: V3300-EBF-TCM-1

Item No. 見出番号	Part No. 部品番号	Mark 記号	Description 部品名称		Req'd 個数	Remarks : serial No. 備考：実施号車
A	BN-1C010-03023		CYLINDER HEAD ASSY	ｼﾘﾝﾀﾞｰﾍｯﾄﾞｱｯｾﾝ	1	INC.1-13, FIG.9-ITEM 8-11
901	BN-07916-27326	K1	UPPER OVERHAUL	ｱｯﾊﾟｰｵｰﾊﾞｰﾎｰﾙ	1	A&C
			GASKET KIT	ｶﾞｽｹｯﾄｷｯﾄ		INC.11,12 & etc.
1	BN-16241-13540		GUIDE,INLET VALVE	ｶﾞｲﾄﾞ	8	
2	BN-17321-13560		GUIDE,EXHAUST VALVE	ｶﾞｲﾄﾞ	4	
3	BN-1C010-13110		VALVE,INLET	ﾊﾞﾙﾌﾞ	8	
4	BN-1C010-13120		VALVE,EXHAUST	ﾊﾞﾙﾌﾞ	4	
5	BN-1C010-13240		SPRING	ｽﾌﾟﾘﾝｸﾞ	8	
6	BN-15221-13240		SPRING	ｽﾌﾟﾘﾝｸﾞ	4	
7	BN-16241-13330		RETAINER	ﾘﾃｰﾅ	8	
8	BN-15221-13330		RETAINER	ﾘﾃｰﾅ	4	
9	BN-15261-13360		COLLET SET	ｺﾚｯﾄｾｯﾄ	8	
10	BN-15221-13980		COLLET SET	ｺﾚｯﾄｾｯﾄ	4	
11	BN-1C010-13150	*	SEAL	ｼｰﾙ	8	
12	BN-1C010-13160	*	SEAL	ｼｰﾙ	4	
13	BN-1C010-13482		SHAFT	ｼｬﾌﾄ	4	
14	BN-1C010-14050		SHAFT	ｼｬﾌﾄ	1	INC.15
15	BN-03410-00808		SCREW,SET	ｽｸﾘｭ	2	
16	BN-1C010-14350		BRACKET	ﾌﾞﾗｹｯﾄ	4	
17	BN-05411-00528		PIN,SPRING	ﾋﾟﾝ	1	
18	BN-1C010-14430		WASHER	ﾜｯｼｬ	2	
19	BN-04612-00160		CIRCLIP	ｻｰｸﾘｯﾌﾟ	2	
20	BN-1C020-14310		SPRING	ｽﾌﾟﾘﾝｸﾞ	3	
21	BN-1C010-14020		ARM,ROCKER	ｱｰﾑ	4	INC.22,23
22	BN-15521-14230		SCREW,ADJUST	ｽｸﾘｭ	4	
23	BN-15021-14240		NUT	ﾅｯﾄ	4	
24	BN-1C010-14150		ARM,ROCKER	ｱｰﾑ	4	INC.25,26
25	BN-15521-14230		SCREW,ADJUST	ｽｸﾘｭ	4	
26	BN-15021-14240		NUT	ﾅｯﾄ	4	
27	BN-01774-51060		BOLT	ﾎﾞﾙﾄ	4	
28	BN-1C020-13460		ARM	ｱｰﾑ	4	INC.29,30
29	BN-1C010-14280		SCREW,ADJUST	ｽｸﾘｭ	4	
30	BN-16241-14240		NUT	ﾅｯﾄ	4	
31	BN-1C010-13490		PAD	ﾊﾟｯﾄﾞ	4	
32	BN-15221-13280		CAP	ｷｬｯﾌﾟ	4	

FIG. 13 MANIFOLD
(EKVB1410) マニホールド

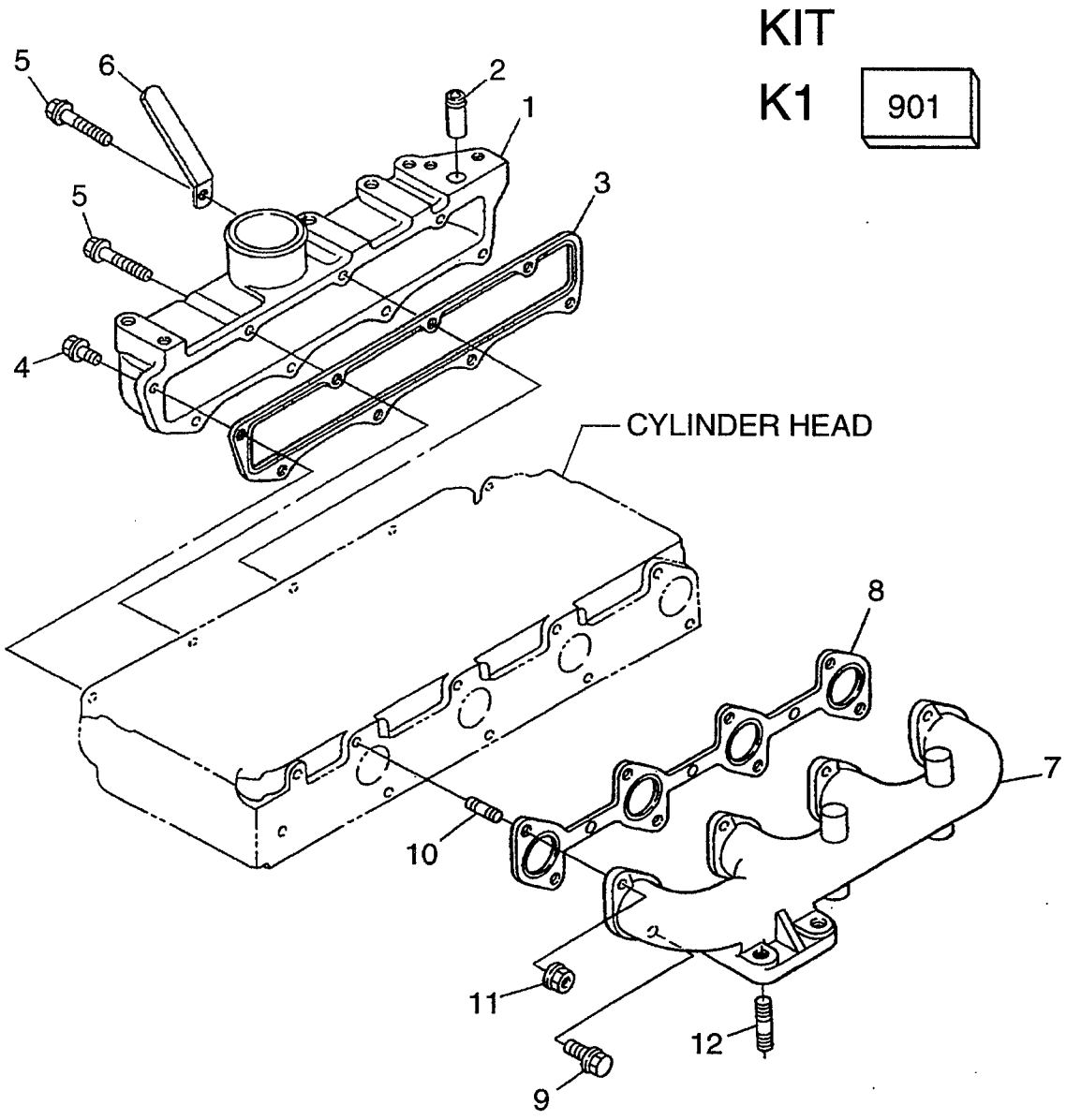

FIG.13

(EKVB1410)

A: V3300-BF-TCM-1 B: V3300-BF-TCM1OC C: V3300-EBF-TCM-1

Item No. 見出番号	Part No. 部品番号	Mark 記号	Description 部品名称		Req'd 個数	Remarks : serial No. 備考：実施号車
901	BN-07916-27326	K1	UPPER OVERHAUL GASKET KIT	ｱｯﾊﾟｵｰﾊﾞﾎｰﾙ ｶﾞｽｹｯﾄｷｯﾄ	1	A&C INC.3,8 & etc.
1	BN-1C010-11770		MANIFOLD,INLET	ﾏﾆﾎｰﾙﾄﾞ	1	INC.2
2	BN-16241-05550		JOINT	ｼﾞｮｲﾝﾄ	1	
3	BN-1C010-11820	*	GASKET	ｶﾞｽｹｯﾄ	1	
4	BN-01754-50820		BOLT	ﾎﾞﾙﾄ	5	
5	BN-01754-50865		BOLT	ﾎﾞﾙﾄ	3	
6	BN-12234-67580		CLAMP	ｸﾗﾝﾌﾟ	1	
7	BN-1C010-12310		MANIFOLD,EXHAUST	ﾏﾆﾎｰﾙﾄﾞ	1	
8	BN-1C010-12352	*	GASKET	ｶﾞｽｹｯﾄ	1	
9	BN-01754-50820		BOLT	ﾎﾞﾙﾄ	4	
10	BN-15221-91530		STUD	ｽﾀｯﾄﾞ	4	
11	BN-02751-50080		NUT	ﾅｯﾄ	4	
12	BN-01517-61030		STUD	ｽﾀｯﾄﾞ	4	

FIG. 14 INLET PIPE
(EKVB1420) インレットパイプ

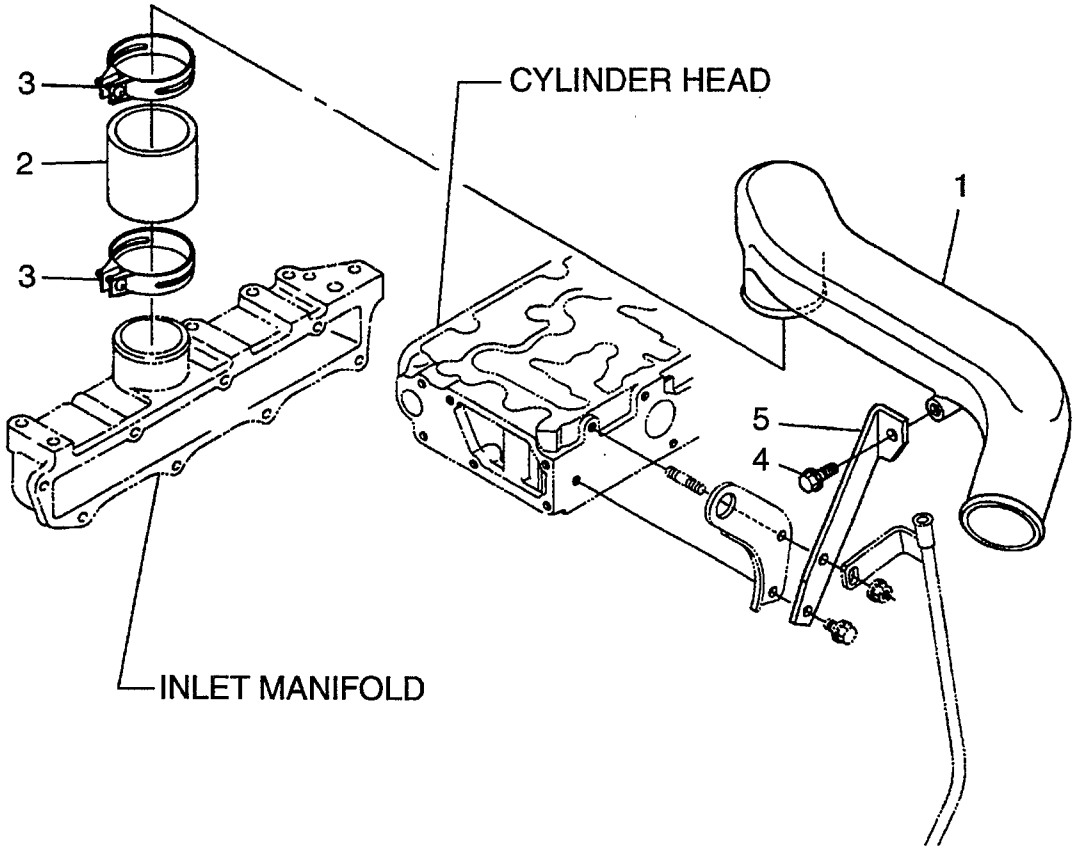

FIG.14
(EKVB1420)

A: V3300-BF-TCM-1 B: V3300-BF-TCM1OC C: V3300-EBF-TCM-1

Item No. 見出番号	Part No. 部品番号	Mark 記号	Description 部品名称	Req'd 個数	Remarks : serial No. 備考：実施号車
1	BN-1K012-11630		PIPE,INLET ﾊﾟｲﾌﾟ	1	
2	BN-1K012-11640		PIPE,INLET ﾊﾟｲﾌﾟ	1	
3	BN-35466-74460		BAND ﾊﾞﾝﾄﾞ	2	
4	BN-01754-50820		BOLT ﾎﾞﾙﾄ	2	
5	BN-1K012-11740		STAY ｽﾃｰ	1	

FIG. 15 HYDRAULIC PUMP
(EKVB1510) ﾊｲﾄﾞﾛﾘｯｸﾎﾟﾝﾌﾟ

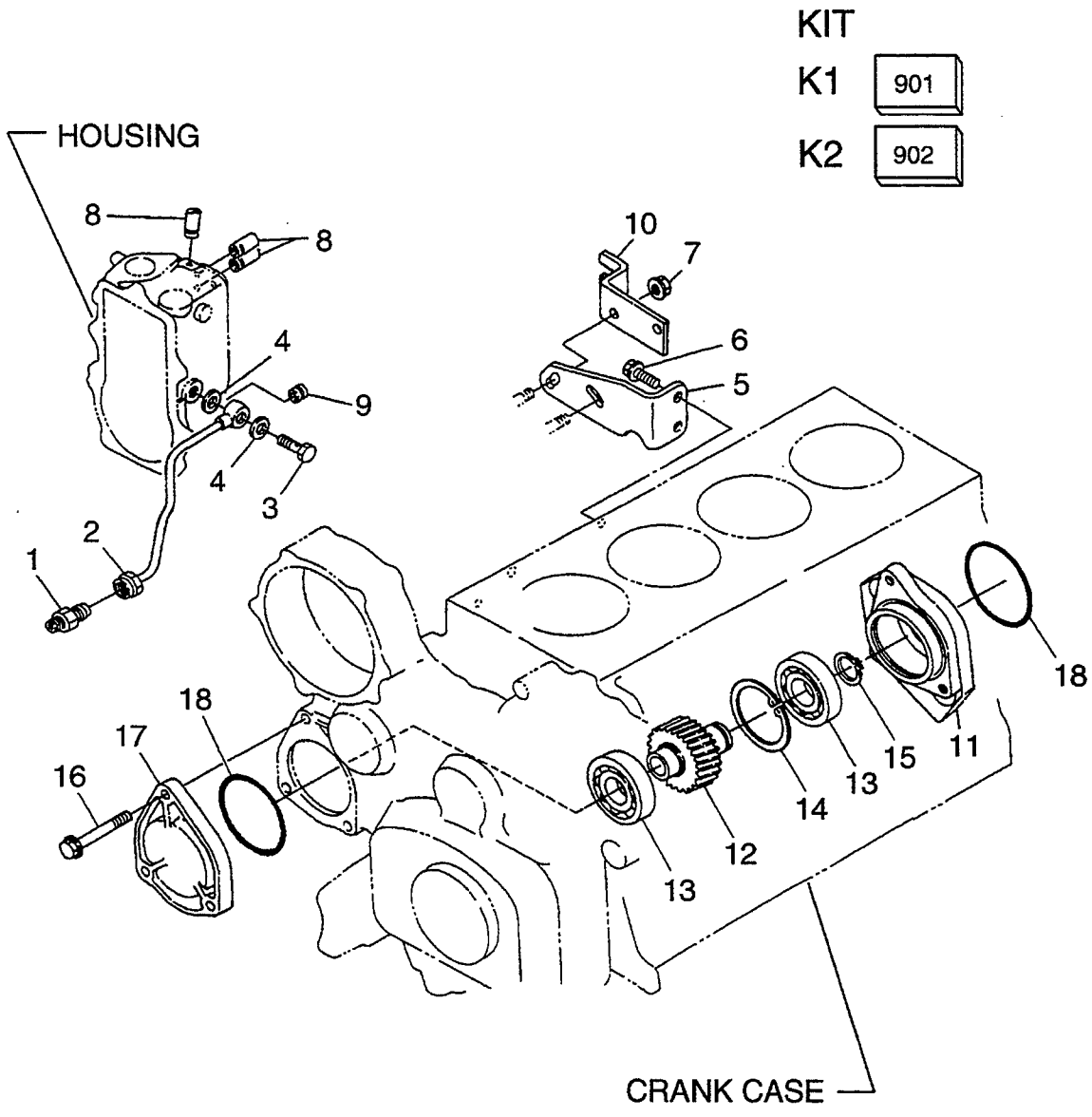

A: V3300-BF-TCM-1 B: V3300-BF-TCM1OC C: V3300-EBF-TCM-1

Item No. 見出番号	Part No. 部品番号	Mark 記号	Description 部品名称		Req'd 個数	Remarks : serial No. 備考：実施号車
901	BN-07916-27326	K1	UPPER OVERHAUL GASKET KIT	ｱｯﾊﾟｵｰﾊﾞﾎｰﾙ ｶﾞｽｹｯﾄｷｯﾄ	1	A&C INC.4 & etc.
902	BN-07916-27336	K2	LOWER OVERHAUL GASKET KIT	ﾛｱｰｵｰﾊﾞﾎｰﾙ ｶﾞｽｹｯﾄｷｯﾄ	1	A&C INC.4,18 & etc.
1	BN-15707-33360		JOINT	ｼﾞｮｲﾝﾄ	1	
2	BN-1C010-33320		PIPE,OIL	ﾊﾟｲﾌﾟ	1	
3	BN-17371-95800		BOLT,EYE	ﾎﾞﾙﾄ	1	
4	BN-15471-96650	*	GASKET	ｶﾞｽｹｯﾄ	2	
5	BN-1C010-51620		BRACKET,PUMP	ﾌﾞﾗｹｯﾄ	1	
6	BN-01754-50814		BOLT	ﾎﾞﾙﾄ	2	
7	BN-02751-50080		NUT	ﾅｯﾄ	2	
8	BN-16221-54420		CAP	ｷｬｯﾌﾟ	3	
9	BN-15841-54270		CAP	ｷｬｯﾌﾟ	1	
10	BN-1K011-57562		BRACKET,WIRE ACCEL	ﾌﾞﾗｹｯﾄ	1	
11	BN-1G522-83060		BASE	ﾍﾞｰｽ	1	A&B&C:-3B0113 INC.12-15
-	BN-1G371-83060		BASE	ﾍﾞｰｽ	1	A&B&C:3C0461- INC.12-15
12	BN-1G522-83190		GEAR	ｷﾞﾔｰ	1	A&B&C:-3B0113
-	BN-1K012-83190		GEAR	ｷﾞﾔｰ	1	A&B&C:3C0461-
13	BN-08103-06206		BEARING	ﾍﾞｱﾘﾝｸﾞ	2	
14	BN-04611-00620		CIRCLIP	ｻｰｸﾘｯﾌﾟ	1	
15	BN-04612-00300		CIRCLIP	ｻｰｸﾘｯﾌﾟ	1	
16	BN-01754-50875		BOLT	ﾎﾞﾙﾄ	3	
17	BN-1G521-83220		COVER	ｶﾊﾞｰ	1	A&B&C:-3B0113
-	BN-1K012-83220		COVER	ｶﾊﾞｰ	1	A&B&C:3C0461-
18	BN-1C010-96960	*	O RING	Oﾘﾝｸﾞ	2	

FIG. 16 OIL COOLER
(EKVB1520) オイルクーラ

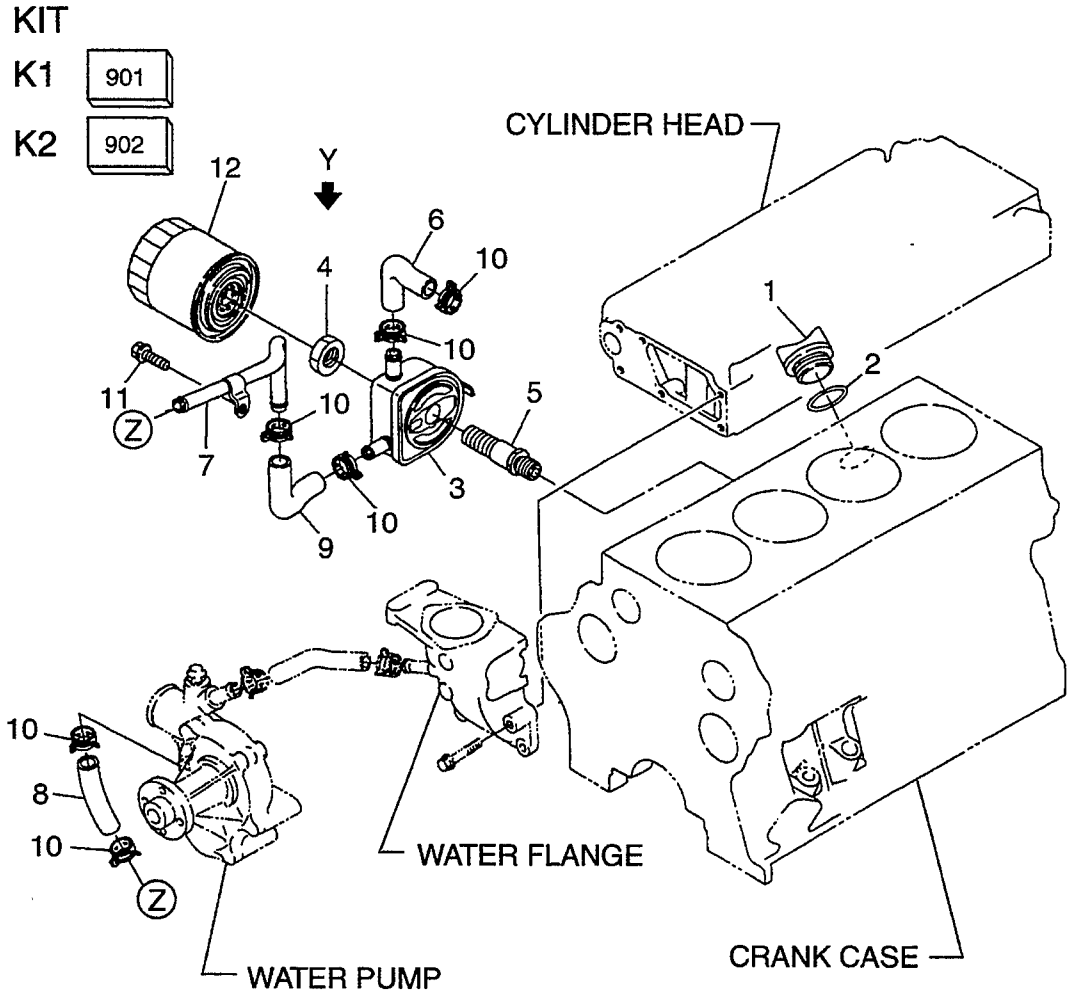

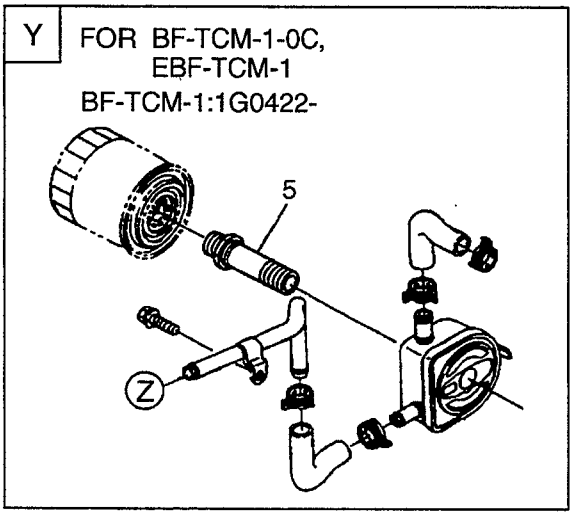

A: V3300-BF-TCM-1 B: V3300-BF-TCM1OC C: V3300-EBF-TCM-1

Item No. 見出番号	Part No. 部品番号	Mark 記号	Description 部品名称		Req'd 個数	Remarks : serial No. 備考：実施号車
901	BN-07916-27326	K1	UPPER OVERHAUL	ｱｯﾊﾟｵｰﾊﾞﾎｰﾙ	1	A&C
			GASKET KIT	ｶﾞｽｹｯﾄｷｯﾄ		INC.2 & etc.
902	BN-07916-27336	K2	LOWER OVERHAUL	ﾛｱｰｵｰﾊﾞﾎｰﾙ	1	A&C
			GASKET KIT	ｶﾞｽｹｯﾄｷｯﾄ		INC.2 & etc.
1	BN-15852-33140		PLUG,OIL FILLER	ﾌﾟﾗｸﾞ	1	A&B
-	BN-E9151-33140		PLUG,OIL FILLER	ﾌﾟﾗｸﾞ	1	A&B&C
2	BN-04811-50300		O RING	Oﾘﾝｸﾞ	1	A&B:-2K0994
-	BN-04817-50300	*	O RING	Oﾘﾝｸﾞ	1	A&B:2L0461-, C
3	BN-1C010-37010		COOLER,OIL	ｸｰﾗ	1	
4	BN-1C010-32280		NUT	ﾅｯﾄ	1	A:-1F1360
5	BN-1C010-32290		JOINT	ｼﾞｮｲﾝﾄ	1	A:-1F1360
-	BN-1C010-32292		JOINT	ｼﾞｮｲﾝﾄ	1	A:1G0422-, B&C
6	BN-1C010-37150		PIPE	ﾊﾟｲﾌﾟ	1	
7	BN-1C010-37160		PIPE	ﾊﾟｲﾌﾟ	1	
8	BN-1C010-37172		PIPE	ﾊﾟｲﾌﾟ	1	
9	BN-1C010-37182		PIPE	ﾊﾟｲﾌﾟ	1	
10	BN-09318-88200		CLAMP	ｸﾗﾝﾌﾟ	6	
11	BN-01754-50814		BOLT	ﾎﾞﾙﾄ	1	
12	BN-1C020-32430		FILTER,OIL	ﾌｨﾙﾀ	1	

FIG. 17 WATER PUMP
(EKVB1610) ｳｫｰﾀﾎﾟﾝﾌﾟ

KIT

K1 901

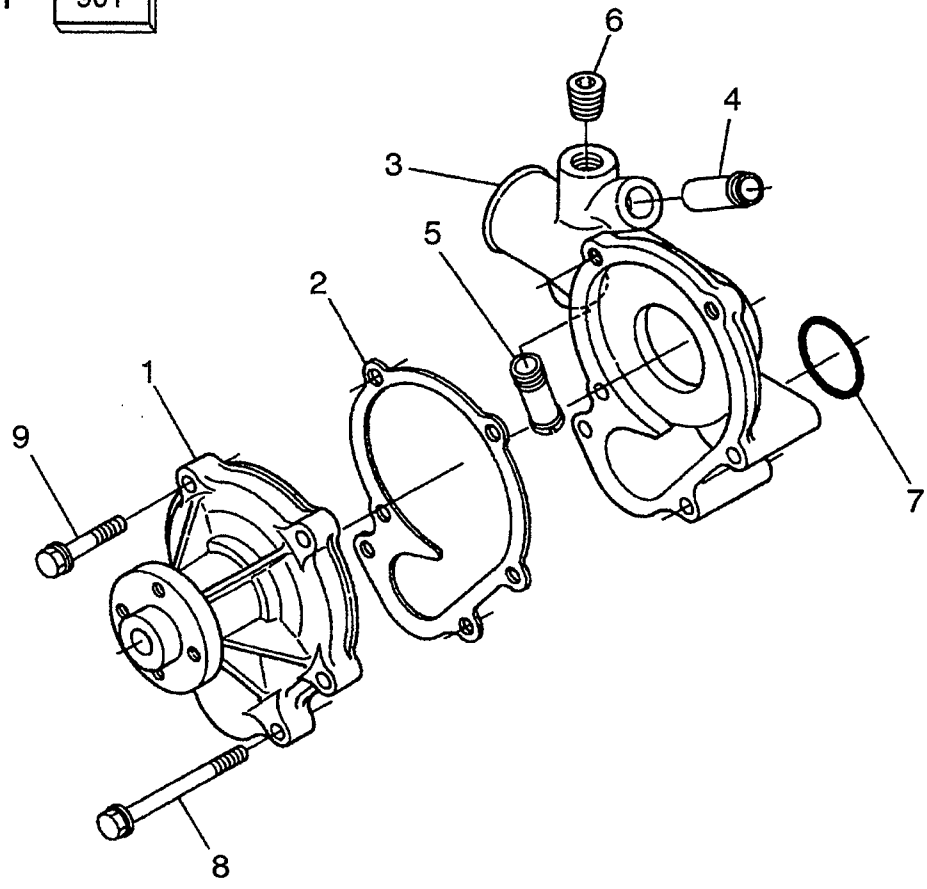

A: V3300-BF-TCM-1 B: V3300-BF-TCM1OC C: V3300-EBF-TCM-1

Item No. 見出番号	Part No. 部品番号	Mark 記号	Description 部品名称		Req'd 個数	Remarks : serial No. 備考：実施号車
901	BN-07916-27336	K1	LOWER OVERHAUL GASKET KIT	ﾛｱｰｵｰﾊﾞﾎｰﾙ ｶﾞｽｹｯﾄｷｯﾄ	1	A&C INC.2,7 & etc.
1	BN-1C010-73030		PUMP,WATER	ﾎﾟﾝﾌﾟ	1	
2	BN-1C010-73430	*	GASKET	ｶﾞｽｹｯﾄ	1	
3	BN-1C010-73060		SUPPORT	ｻﾎﾟｰﾄ	1	A&B:-2S9683 INC.4-6
-	BN-1C010-73066		SUPPORT	ｻﾎﾟｰﾄ	1	A&B:2U0362-, C INC.4-6
4	BN-1C010-37110		JOINT	ｼﾞｮｲﾝﾄ	1	A&B:-2S9683
-	BN-1C010-37114		JOINT	ｼﾞｮｲﾝﾄ	1	A&B:2U0362-, C
5	BN-16241-05550		JOINT	ｼﾞｮｲﾝﾄ	1	
6	BN-16241-96020		PLUG	ﾌﾟﾗｸﾞ	1	
7	BN-04814-00420	*	O RING	Oﾘﾝｸﾞ	1	
8	BN-01754-50880		BOLT	ﾎﾞﾙﾄ	4	
9	BN-01754-50830		BOLT	ﾎﾞﾙﾄ	2	

FIG. 18 WATER FLANGE & THERMOSTAT
(EKVB1620) ｳｫｰﾀﾌﾗﾝｼﾞ &ｻｰﾓｽﾀｯﾄ

KIT

K1 901

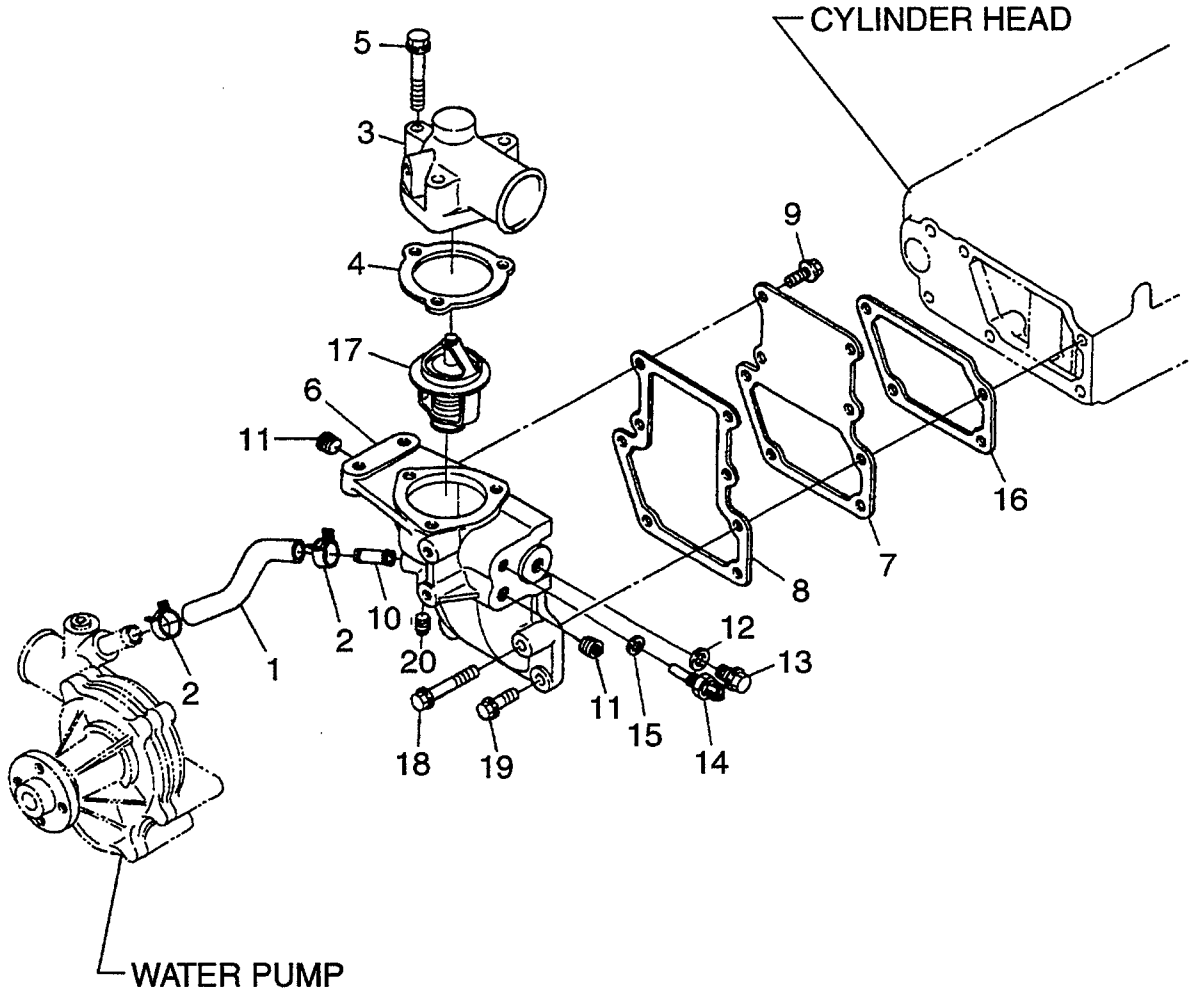

FIG.18

(EKVB1620)

A: V3300-BF-TCM-1 B: V3300-BF-TCM1OC C: V3300-EBF-TCM-1

Item No. 見出番号	Part No. 部品番号	Mark 記号	Description 部品名称		Req'd 個数	Remarks : serial No. 備考：実施号車
901	BN-07916-27326	K1	UPPER OVERHAUL	ｱｯﾊﾟｵｰﾊﾞﾎｰﾙ	1	A&C
			GASKET KIT	ｶﾞｽｹｯﾄｷｯﾄ		INC.4,8,16 & etc.
1	BN-1C010-73350		PIPE	ﾊﾟｲﾌﾟ	1	
2	BN-09318-88200		CLAMP	ｸﾗﾝﾌﾟ	2	
3	BN-1K011-73260		COVER,THERMOSTAT	ｶﾊﾞｰ	1	
4	BN-1C010-73270	*	GASKET	ｶﾞｽｹｯﾄ	1	
5	BN-01754-50850		BOLT	ﾎﾞﾙﾄ	3	A&B:-2S9683
-	BN-01754-50845		BOLT	ﾎﾞﾙﾄ	3	A&B:2U0362-, C
6	BN-1G522-72700		FLANGE,WATER	ﾌﾗﾝｼﾞ	1	A&B:-2S9683
						INC.7-10,20
-	BN-1G522-72704		FLANGE,WATER	ﾌﾗﾝｼﾞ	1	A&B:2U0362-, C
						INC.7-10,20
7	BN-1C010-72810		COVER	ｶﾊﾞｰ	1	
8	BN-1C010-72922	*	GASKET	ｶﾞｽｹｯﾄ	1	
9	BN-01754-50816		BOLT	ﾎﾞﾙﾄ	4	
10	BN-1C010-37110		JOINT	ｼﾞｮｲﾝﾄ	1	A&B:-2S9683
-	BN-1C010-37114		JOINT	ｼﾞｮｲﾝﾄ	1	A&B:2U0362-, C
11	BN-16241-96020		PLUG	ﾌﾟﾗｸﾞ	2	
12	BN-04717-01600		PACKING	ﾊﾟｯｷﾝｸﾞ	1	
13	BN-15000-36080		PLUG	ﾌﾟﾗｸﾞ	1	
14	BN-16415-83040		SENSOR	ｾﾝｻ	1	
15	BN-04717-01200		WASHER,RUBBER	ﾜｯｼｬ	1	
16	BN-1C010-72820	*	GASKET	ｶﾞｽｹｯﾄ	1	
17	BN-1C010-73010		THERMOSTAT	ｻｰﾓｽﾀｯﾄ	1	
18	BN-01754-50850		BOLT	ﾎﾞﾙﾄ	1	
19	BN-01754-50825		BOLT	ﾎﾞﾙﾄ	3	
20	BN-16241-96020		PLUG	ﾌﾟﾗｸﾞ	1	

FIG. 19 **FAN**
(EKVB1630) ファン

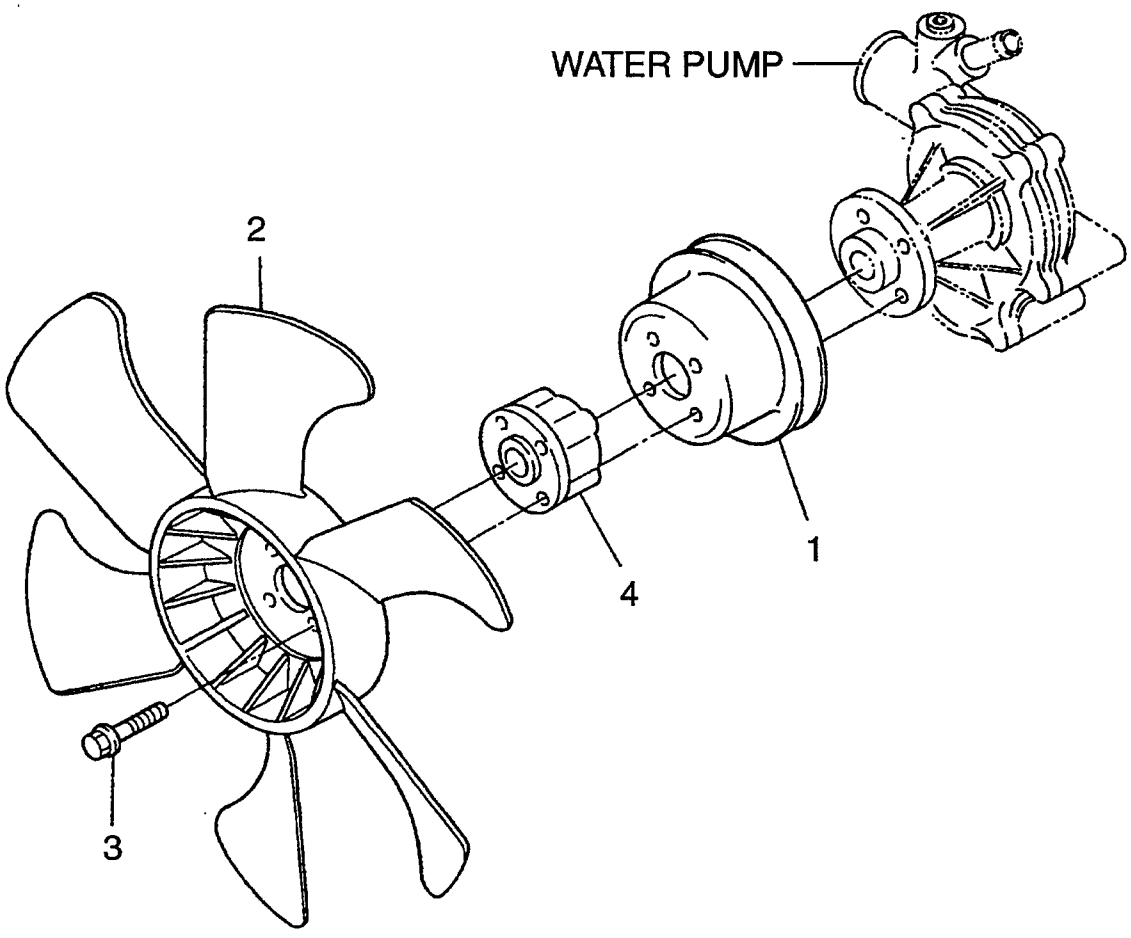

FIG.19

(EKVB1630)

A: V3300-BF-TCM-1 B: V3300-BF-TCM1OC C: V3300-EBF-TCM-1

Item No. 見出番号	Part No. 部品番号	Mark 記号	Description 部品名称	Req'd 個数	Remarks : serial No. 備考：実施号車
1	BN-1K011-74250		PULLEY,FAN ﾌﾟｰﾘ	1	
2	BN-1K011-74110		FAN ﾌｧﾝ	1	
3	BN-01754-50840		BOLT ﾎﾞﾙﾄ	4	
4	BN-1K011-74150		COLLAR ｶﾗｰ	1	

FIG. 20 NOZZLE HOLDER & GLOW PLUG(A&B:-2Q9814)
(EKVB1710) ﾉｽﾞﾙﾎﾙﾀﾞ&ｸﾞﾛｰﾌﾟﾗｸﾞ

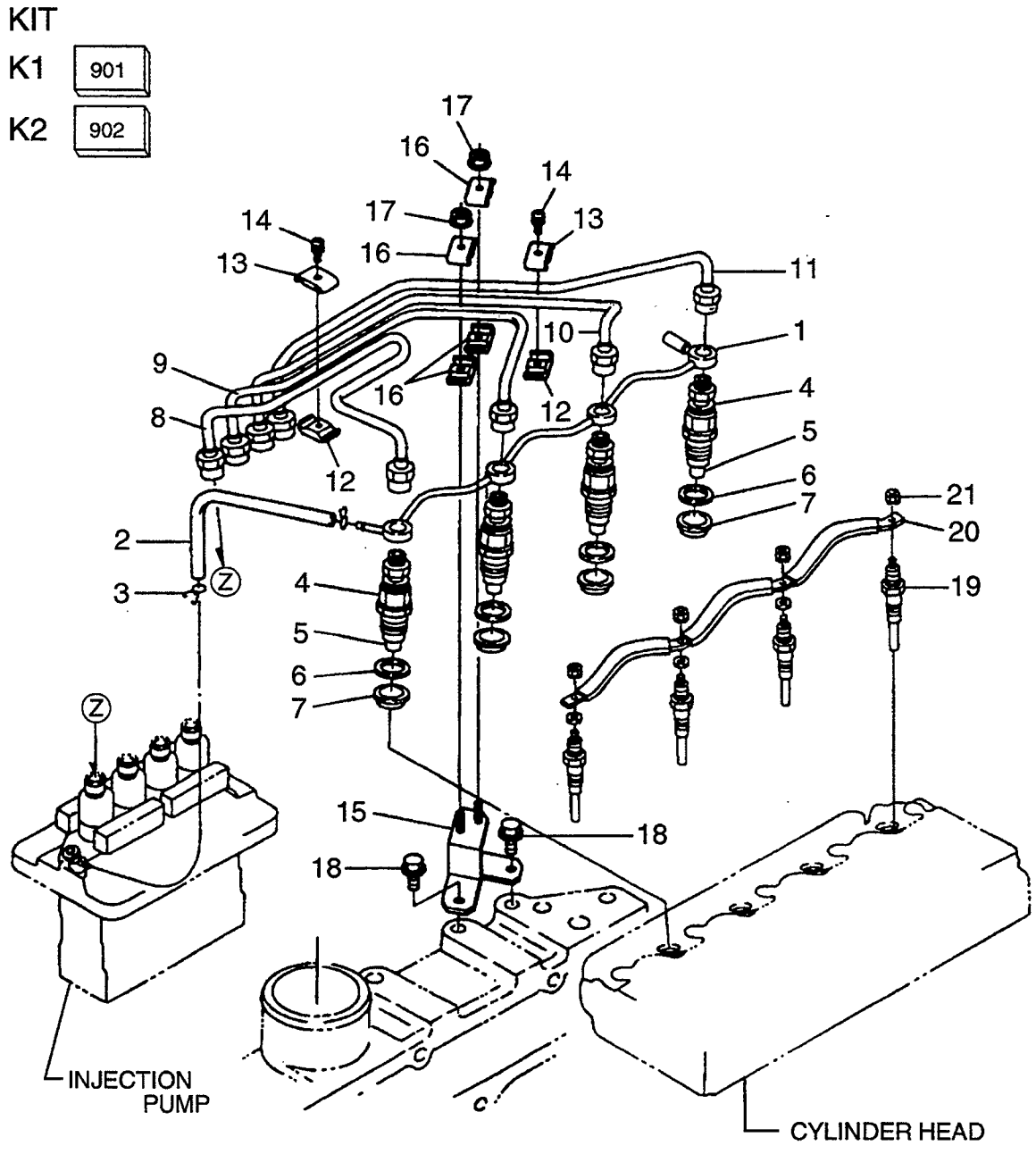

A: V3300-BF-TCM-1 B: V3300-BF-TCM1OC C: V3300-EBF-TCM-1

Item No. 見出番号	Part No. 部品番号	Mark 記号	Description 部品名称		Req'd 個数	Remarks : serial No. 備考：実施号車
901	BN-07916-27326	K1	UPPER OVERHAUL GASKET KIT	ｱｯﾊﾟｵｰﾊﾞﾎｰﾙ ｶﾞｽｹｯﾄｷｯﾄ	1	A INC.6,7 & etc.
902	BN-1C010-53900	K2	NOZZLE HOLDER KIT	ﾉｽﾞﾙﾎﾙﾀﾞｷｯﾄ	4	INC.4-7
1	BN-1C010-42500		PIPE	ﾊﾟｲﾌﾟ	1	
A	BN-1C010-42400		PIPE ASSY	ﾊﾟｲﾌﾟｱｯｾﾝ	1	INC.2,3
2	BN-09661-40170		TUBE	ﾁｭｰﾌﾞ	1	
3	BN-14971-42750		CLIP	ｸﾘｯﾌﾟ	2	
4	BN-1C010-53000	*	NOZZLE HOLDER	ﾉｽﾞﾙﾎﾙﾀﾞ	4	INC.5 SEE FIG.21
5	BN-1C010-53610	*	PIECE,NOZZLE	ﾋﾟｰｽ	4	
6	BN-15841-53622	*	GASKET	ｶﾞｽｹｯﾄ	4	
7	BN-19077-53650	*	SEAL,HEAT	ｼｰﾙ	4	
8	BN-1C010-53710		PIPE,INJECTION	ﾊﾟｲﾌﾟ	1	
9	BN-1C010-53720		PIPE,INJECTION	ﾊﾟｲﾌﾟ	1	
10	BN-1C010-53730		PIPE,INJECTION	ﾊﾟｲﾌﾟ	1	
11	BN-1C010-53740		PIPE,INJECTION	ﾊﾟｲﾌﾟ	1	
12	BN-15841-53850		CLAMP	ｸﾗﾝﾌﾟ	2	
13	BN-15841-53860		CLAMP	ｸﾗﾝﾌﾟ	2	
14	BN-03024-50520		SCREW&WASHER	ｽｸﾘｭ&ﾜｯｼｬ	2	
15	BN-1K012-53890		STAY	ｽﾃｰ	1	
16	BN-15841-53860		CLAMP	ｸﾗﾝﾌﾟ	4	
17	BN-02761-50050		NUT	ﾅｯﾄ	2	
18	BN-01774-61020		BOLT	ﾎﾞﾙﾄ	2	
19	BN-16415-65510		PLUG,GLOW	ﾌﾟﾗｸﾞ	4	
20	BN-1C010-65560		CORD,GLOW PLUG	ｺｰﾄﾞ	1	
21	BN-02761-50040		NUT	ﾅｯﾄ	4	

FIG. 20A NOZZLE HOLDER & GLOW PLUG(A&B:2S0413-, C)

(EKVB1711) ﾉｽﾞﾙﾎﾙﾀﾞ&ｸﾞﾛｰﾌﾟﾗｸﾞ

KIT

K1 901

K2 902

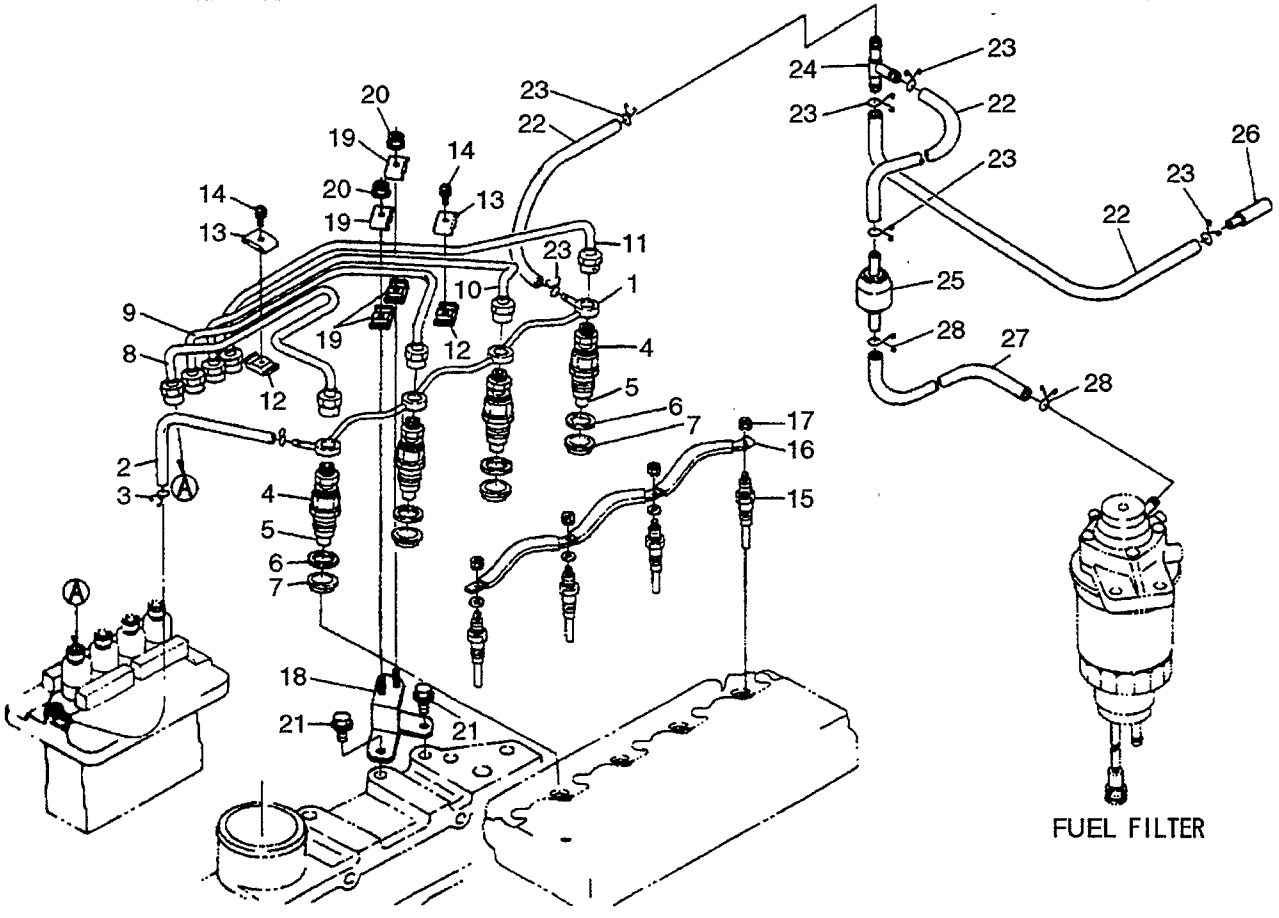

FIG. 20A

(EKVB1711)

A: V3300-BF-TCM-1 B: V3300-BF-TCM1OC C: V3300-EBF-TCM-1

Item No. 見出番号	Part No. 部品番号	Mark 記号	Description 部品名称		Req'd 個数	Remarks : serial No. 備考：実施号車
901	BN-07916-27326	K1	UPPER OVERHAUL GASKET KIT	ｱｯﾊﾟｵｰﾊﾞﾎｰﾙ ｶﾞｽｹｯﾄｷｯﾄ	1	A&C INC.6,7 & etc.
902	BN-1C010-53900	K2	NOZZLE HOLDER KIT	ﾉｽﾞﾙﾎﾙﾀﾞｷｯﾄ	4	INC.4-7
1	BN-1C010-42500		PIPE	ﾊﾟｲﾌﾟ	1	
A1	BN-1C010-42400		PIPE ASSY	ﾊﾟｲﾌﾟｱｯｾﾝ	1	INC.2,3
2	BN-09661-40170		TUBE	ﾁｭｰﾌﾞ	1	
3	BN-14971-42750		CLIP	ｸﾘｯﾌﾟ	2	
4	BN-1C010-53000	*	NOZZLE HOLDER	ﾉｽﾞﾙﾎﾙﾀﾞ	4	INC.5 SEE FIG.21
5	BN-1C010-53610	*	PIECE,NOZZLE	ﾋﾟｰｽ	1	
6	BN-15841-53622	*	GASKET	ｶﾞｽｹｯﾄ	4	
7	BN-19077-53650	*	SEAL,HEAT	ｼｰﾙ	4	
8	BN-1C010-53710		PIPE,INJECTION	ﾊﾟｲﾌﾟ	1	
9	BN-1C010-53720		PIPE,INJECTION	ﾊﾟｲﾌﾟ	1	
10	BN-1C010-53730		PIPE,INJECTION	ﾊﾟｲﾌﾟ	1	
11	BN-1C010-53740		PIPE,INJECTION	ﾊﾟｲﾌﾟ	1	
12	BN-15841-53850		CLAMP	ｸﾗﾝﾌﾟ	2	
13	BN-15841-53860		CLAMP	ｸﾗﾝﾌﾟ	2	
14	BN-03024-50520		SCREW&WASHER	ｽｸﾘｭ&ﾜｯｼｬ	2	
15	BN-16415-65512		PLUG,GLOW	ﾌﾟﾗｸﾞ	4	
16	BN-1C010-65560		CORD,GLOW PLUG	ｺｰﾄﾞ	1	
17	BN-02761-50040		NUT	ﾅｯﾄ	4	
18	BN-1K012-53890		STAY	ｽﾃｰ	1	
19	BN-15841-53860		CLAMP	ｸﾗﾝﾌﾟ	4	
20	BN-02761-50050		NUT	ﾅｯﾄ	2	
21	BN-01774-61020		BOLT	ﾎﾞﾙﾄ	2	
A2	BN-17208-42030		PIPE ASSY	ﾊﾟｲﾌﾟｱｯｾﾝ	3	INC.22,23
22	BN-09661-40100		TUBE	ﾁｭｰﾌﾞ	3	
23	BN-14971-42750		CLIP,PIPE	ｸﾘｯﾌﾟ	6	
24	BN-1C020-42360		JOINT	ｼﾞｮｲﾝﾄ	1	
25	BN-1C010-42460		VALVE,FUEL CHECK	ﾊﾞﾙﾌﾞ	1	
26	BN-1K012-42360		JOINT	ｼﾞｮｲﾝﾄ	1	
A3	BN-1C010-42400		PIPE ASSY	ﾊﾟｲﾌﾟｱｯｾﾝ	1	INC.27,28
27	BN-09661-40170		TUBE	ﾁｭｰﾌﾞ	1	
28	BN-14971-42750		CLIP,PIPE	ｸﾘｯﾌﾟ	2	

FIG. 21 NOZZLE HOLDER(INNER PARTS)
(EKVB1720) ﾉｽﾞﾙﾎﾙﾀﾞ(ｲﾝﾅﾊﾟｰﾂ)

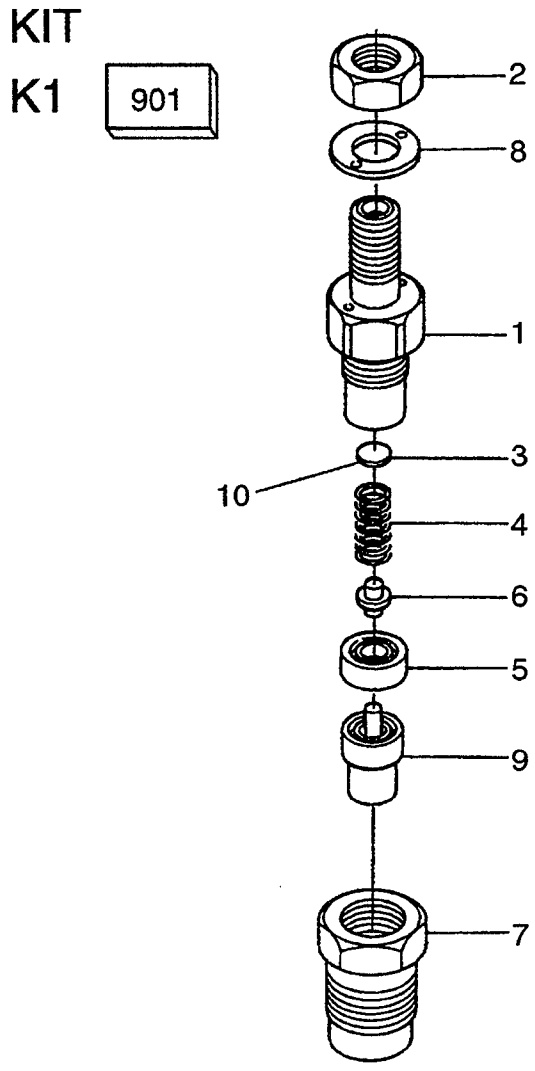

A: V3300-BF-TCM-1 B: V3300-BF-TCM1OC C: V3300-EBF-TCM-1

Item No. 見出番号	Part No. 部品番号	Mark 記号	Description 部品名称		Req'd 個数	Remarks : serial No. 備考：実施号車
A1	BN-1C010-53000		NOZZLE HOLDER ASSY	ﾉｽﾞﾙﾎﾙﾀﾞｱｯｾﾝ	4	INC.1-9
A2	BN-1C010-53010		NOZZLE HOLDER SUB ASSY	ﾉｽﾞﾙﾎﾙﾀﾞｻﾌﾞｱｯｾﾝ	4	INC.1-8
901	BN-1C010-53900	K1	NOZZLE HOLDER KIT	ﾉｽﾞﾙﾎﾙﾀﾞｷｯﾄ	4	INC.1-9 & etc.
1	NO PART NO.	*	BODY	ﾎﾞﾃﾞｰ	4	
2	BN-15841-92030	*	NUT	ﾅｯﾄ	4	
3	BN-15841-53230	*	WASHER,ADJUSTING	ﾜｯｼｬ	4	
4	BN-1C010-53170	*	SPRING,NOZZLE	ｽﾌﾟﾘﾝｸﾞ	4	
5	BN-15841-53350	*	PIECE,DISTANCE	ﾋﾟｰｽ	4	
6	BN-15841-53160	*	ROD,PUSH	ﾛｯﾄﾞ	4	
7	BN-16475-53280	*	NUT	ﾅｯﾄ	4	
8	BN-15841-94040	*	WASHER	ﾜｯｼｬ	4	
9	BN-1C010-53610	*	PIECE,NOZZLE	ﾋﾟｰｽ	4	
A3	BN-15841-98100		ADJUST WASHER ASSY	ｱｼﾞｬｽﾄﾜｯｼｬｱｯｾﾝ	4	INC.10
10	BN-15841-53230		WASHER	ﾜｯｼｬ	4	t=0.900mm
-	BN-15841-98510		WASHER	ﾜｯｼｬ	4	t=0.925mm
-	BN-15841-98520		WASHER	ﾜｯｼｬ	4	t=0.950mm
-	BN-15841-98530		WASHER	ﾜｯｼｬ	4	t=0.975mm
-	BN-15841-98540		WASHER	ﾜｯｼｬ	4	t=1.000mm
-	BN-15841-98550		WASHER	ﾜｯｼｬ	4	t=1.025mm
-	BN-15841-98560		WASHER	ﾜｯｼｬ	4	t=1.050mm
-	BN-15841-98570		WASHER	ﾜｯｼｬ	4	t=1.075mm
-	BN-15841-98580		WASHER	ﾜｯｼｬ	4	t=1.100mm
-	BN-15841-98590		WASHER	ﾜｯｼｬ	4	t=1.125mm
-	BN-15841-98600		WASHER	ﾜｯｼｬ	4	t=1.150mm
-	BN-15841-98610		WASHER	ﾜｯｼｬ	4	t=1.175mm
-	BN-15841-98620		WASHER	ﾜｯｼｬ	4	t=1.200mm
-	BN-15841-98630		WASHER	ﾜｯｼｬ	4	t=1.225mm
-	BN-15841-98640		WASHER	ﾜｯｼｬ	4	t=1.250mm
-	BN-15841-98650		WASHER	ﾜｯｼｬ	4	t=1.275mm
-	BN-15841-98660		WASHER	ﾜｯｼｬ	4	t=1.300mm
-	BN-15841-98670		WASHER	ﾜｯｼｬ	4	t=1.325mm
-	BN-15841-98680		WASHER	ﾜｯｼｬ	4	t=1.350mm
-	BN-15841-98690		WASHER	ﾜｯｼｬ	4	t=1.375mm
-	BN-15841-98700		WASHER	ﾜｯｼｬ	4	t=1.400mm
-	BN-15841-98710		WASHER	ﾜｯｼｬ	4	t=1.425mm
-	BN-15841-98720		WASHER	ﾜｯｼｬ	4	t=1.450mm
-	BN-15841-98730		WASHER	ﾜｯｼｬ	4	t=1.475mm
-	BN-15841-98740		WASHER	ﾜｯｼｬ	4	t=1.500mm
-	BN-15841-98750		WASHER	ﾜｯｼｬ	4	t=1.525mm
-	BN-15841-98760		WASHER	ﾜｯｼｬ	4	t=1.550mm
-	BN-15841-98770		WASHER	ﾜｯｼｬ	4	t=1.575mm
-	BN-15841-98780		WASHER	ﾜｯｼｬ	4	t=1.600mm
-	BN-15841-98790		WASHER	ﾜｯｼｬ	4	t=1.625mm
-	BN-15841-98800		WASHER	ﾜｯｼｬ	4	t=1.650mm
-	BN-15841-98810		WASHER	ﾜｯｼｬ	4	t=1.675mm
-	BN-15841-98820		WASHER	ﾜｯｼｬ	4	t=1.700mm
-	BN-15841-98830		WASHER	ﾜｯｼｬ	4	t=1.725mm
-	BN-15841-98840		WASHER	ﾜｯｼｬ	4	t=1.750mm
-	BN-15841-98850		WASHER	ﾜｯｼｬ	4	t=1.775mm
-	BN-15841-98860		WASHER	ﾜｯｼｬ	4	t=1.800mm

FIG. 21 NOZZLE HOLDER(INNER PARTS)
(EKVB1720) ﾉｽﾞﾙﾎﾙﾀﾞ(ｲﾝﾅﾊﾟｰﾂ)

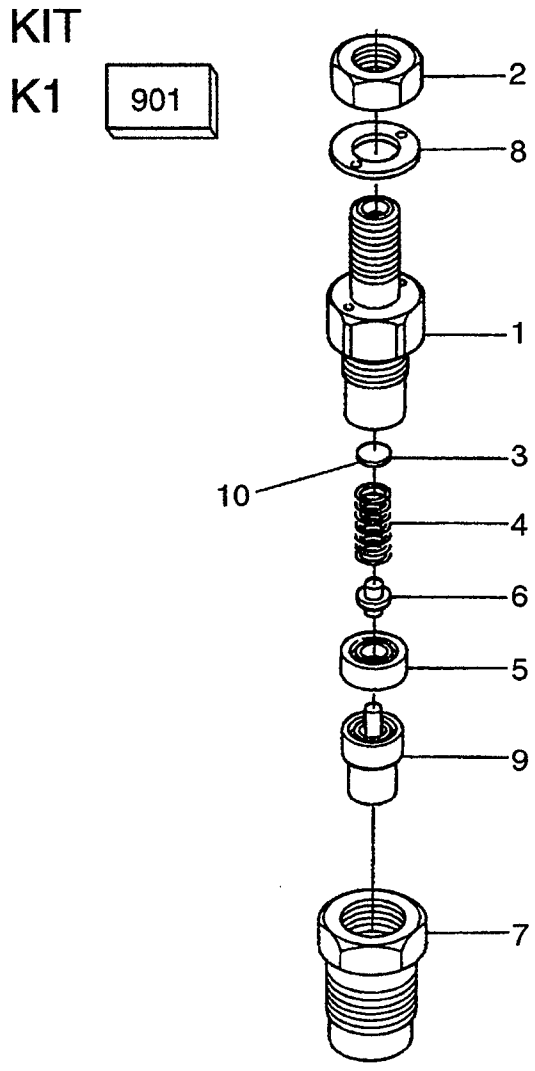

FIG.21
(EKVB1720)

A: V3300-BF-TCM-1 B: V3300-BF-TCM1OC C: V3300-EBF-TCM-1

Item No. 見出番号	Part No. 部品番号	Mark 記号	Description 部品名称	Req'd 個数	Remarks : serial No. 備考：実施号車
10	BN-15841-98870		WASHER ﾜｯｼｬ	4	t=1.825mm
-	BN-15841-98880		WASHER ﾜｯｼｬ	4	t=1.850mm
-	BN-15841-98890		WASHER ﾜｯｼｬ	4	t=1.875mm
-	BN-15841-98900		WASHER ﾜｯｼｬ	4	t=1.900mm
-	BN-15841-98910		WASHER ﾜｯｼｬ	4	t=1.925mm
-	BN-15841-98920		WASHER ﾜｯｼｬ	4	t=1.950mm

FIG. 22 INJECTION PUMP MOUNT
(EKVB1730) インジェクションポンプマウント

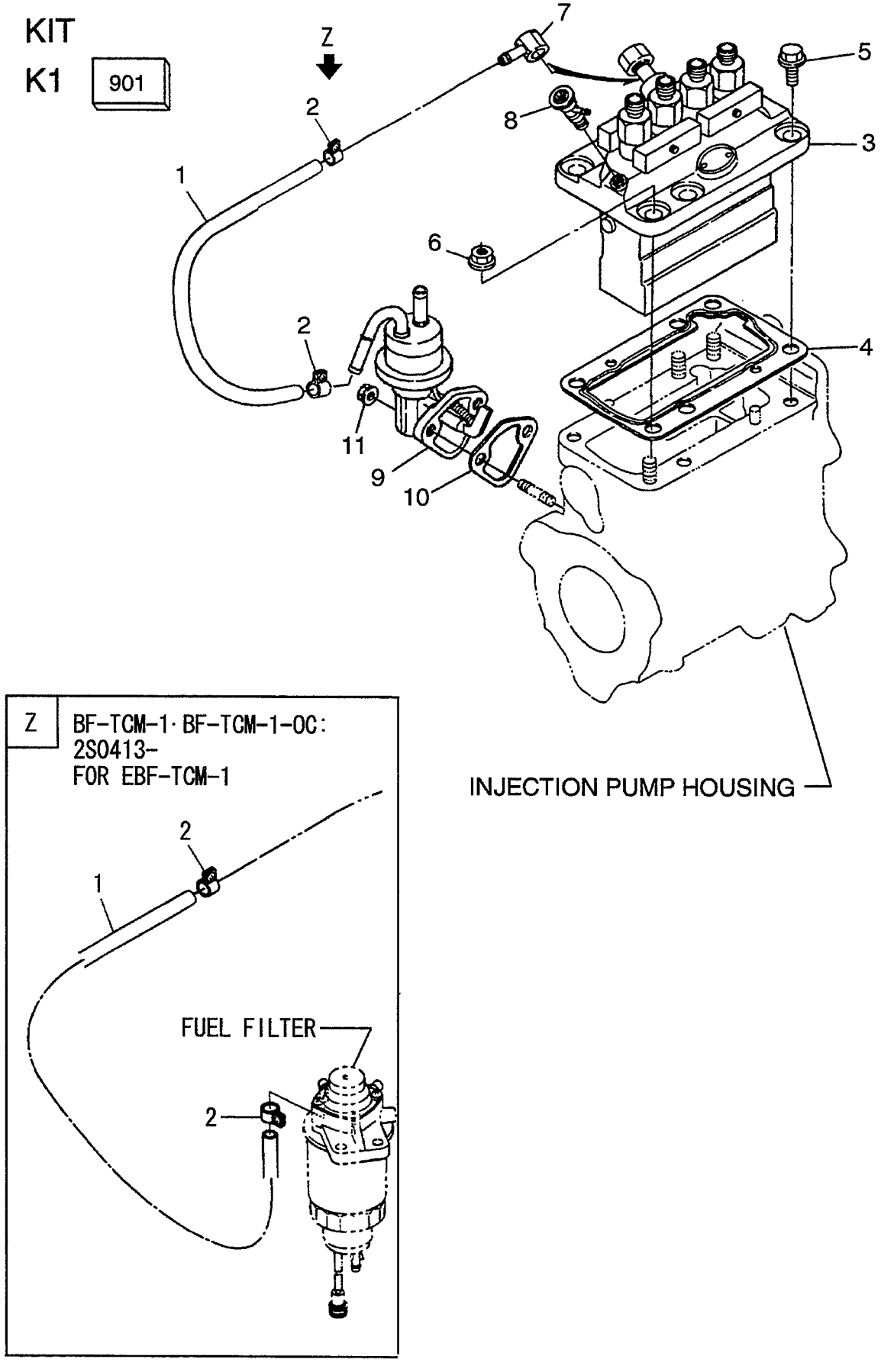

A: V3300-BF-TCM-1 B: V3300-BF-TCM1OC C: V3300-EBF-TCM-1

Item No. 見出番号	Part No. 部品番号	Mark 記号	Description 部品名称		Req'd 個数	Remarks : serial No. 備考：実施号車
A1	BN-1K011-42010		FUEL TUBE ASSY	ﾌｭｰｴﾙﾁｭｰﾌﾞｱｯｾﾝ	1	A&B:-2Q9814 INC.1,2
-	BN-1K012-42030		FUEL TUBE ASSY	ﾌｭｰｴﾙﾁｭｰﾌﾞｱｯｾﾝ	1	A&B:2S0413-, C INC.1,2
901	BN-07916-27336	K1	LOWER OVERHAUL GASKET KIT	ﾛｱｰｵｰﾊﾞﾎｰﾙ ｶﾞｽｹｯﾄｷｯﾄ	1	A&C INC.10 & etc.
1	BN-09661-70150		TUBE	ﾁｭｰﾌﾞ	1	A&B:-2Q9814
-	BN-09661-70675		TUBE	ﾁｭｰﾌﾞ	1	A&B:2S0413-, C
2	BN-14911-42750		CLIP	ｸﾘｯﾌﾟ	2	A&B:-2Q9814
-	BN-14301-42750		CLIP	ｸﾘｯﾌﾟ	2	A&B:2S0413-, C
A2	BN-1K012-50050		INJECTION PUMP ASSY	ｲﾝｼﾞｪｸｼｮﾝﾎﾟﾝﾌﾟ ｱｯｾﾝ	1	A&B INC.3-11 & etc.
3	BN-1K012-51010		INJECTION PUMP	ｲﾝｼﾞｪｸｼｮﾝﾎﾟﾝﾌﾟ	1	A:-1Y8640 SEE FIG.23
-	BN-1K012-51012		INJECTION PUMP	ｲﾝｼﾞｪｸｼｮﾝﾎﾟﾝﾌﾟ	1	A:2A0001-, B&C SEE FIG.23
4	BN-1C010-52110		SHIM	ｼﾑ	1	
5	BN-01754-50825		BOLT	ﾎﾞﾙﾄ	3	
6	BN-02751-50080		NUT	ﾅｯﾄ	3	
7	BN-15401-95690		JOINT	ｼﾞｮｲﾝﾄ	1	
8	BN-14311-60504		COCK	ｺｯｸ	1	
9	BN-1K011-52030		PUMP,FUEL	ﾎﾟﾝﾌﾟ	1	
10	BN-16264-52140	*	GASKET	ｶﾞｽｹｯﾄ	1	
11	BN-02751-50060		NUT	ﾅｯﾄ	2	

FIG. 23 INJECTION PUMP(INNER PARTS)
(EKVB1740) ｲﾝｼﾞｪｸｼｮﾝﾎﾟﾝﾌﾟ(ｲﾝﾅﾊﾟｰﾂ)

KIT

K1 901

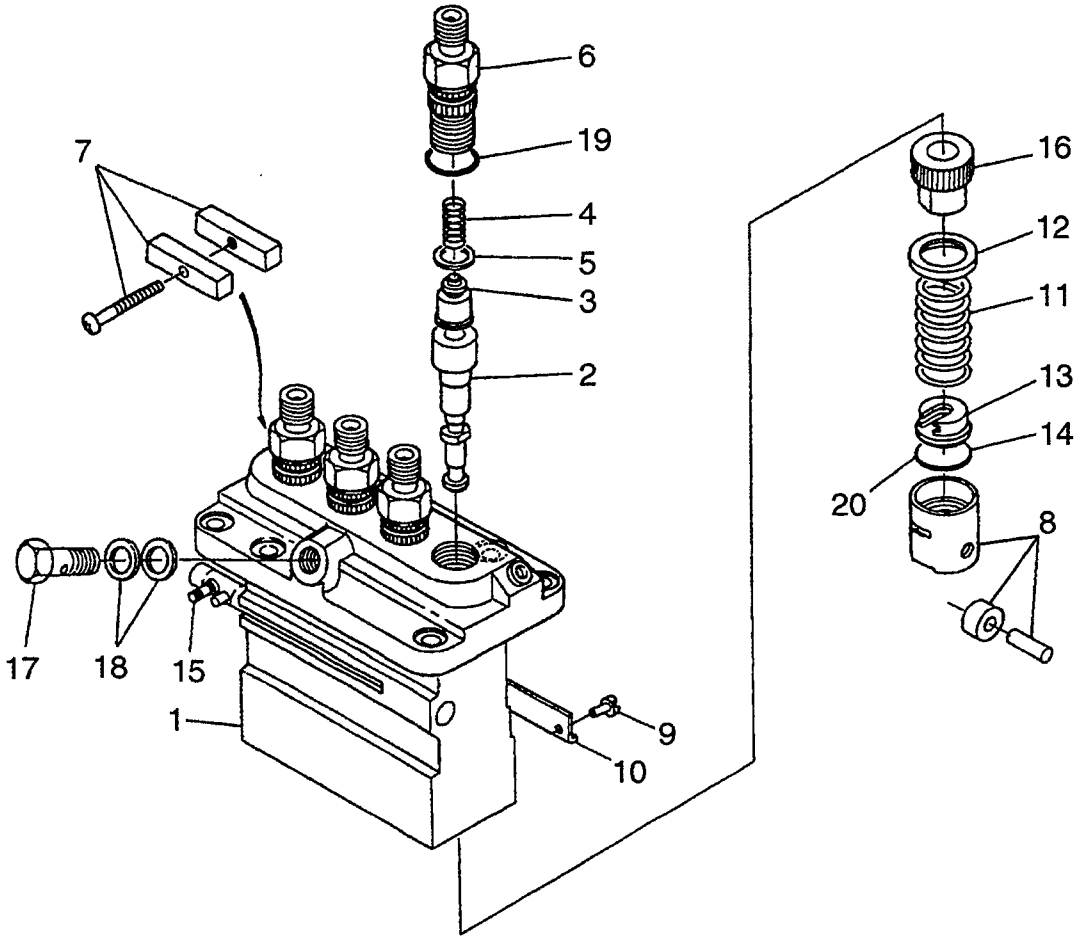

A: V3300-BF-TCM-1 B: V3300-BF-TCM1OC C: V3300-EBF-TCM-1

Item No. 見出番号	Part No. 部品番号	Mark 記号	Description 部品名称		Req'd 個数	Remarks : serial No. 備考：実施号車
901	BN-14601-98300	K1	SHIM KIT	ｼﾑｷｯﾄ	4	A:-1Y8640
						INC.20
1	BN-1K012-51010		PUMP,INJECTION	ﾎﾟﾝﾌﾟ	1	A:-1Y8640
						INC.2-19
-	BN-1K012-51012		PUMP,INJECTION	ﾎﾟﾝﾌﾟ	1	A:2A0001-, B&C
						INC.17,18
2	BN-1K012-51050		PLUNGER	ﾌﾟﾗﾝｼﾞｬ	4	A:-1Y8640
3	BN-15221-51030		VALVE,DELIVERY	ﾊﾞﾙﾌﾞ	4	A:-1Y8640
4	BN-16454-51230		SPRING	ｽﾌﾟﾘﾝｸﾞ	4	A:-1Y8640
5	BN-15221-51240		GASKET	ｶﾞｽｹｯﾄ	4	A:-1Y8640
6	BN-16415-51220		HOLDER	ﾎﾙﾀﾞ	4	A:-1Y8640
7	BN-16475-51610		PLATE,LOCK	ﾌﾟﾚｰﾄ	2	A:-1Y8640
8	BN-15221-51070		TAPPET	ﾀﾍﾟｯﾄ	4	A:-1Y8640
9	BN-14611-51250		PIN	ﾋﾟﾝ	4	A:-1Y8640
10	BN-14611-51440		PLATE	ﾌﾟﾚｰﾄ	2	A:-1Y8640
11	BN-15221-51280		SPRING	ｽﾌﾟﾘﾝｸﾞ	4	A:-1Y8640
12	BN-15221-51270		SEAT,SPRING	ｼｰﾄ	4	A:-1Y8640
13	BN-15221-51290		SEAT,SPRING	ｼｰﾄ	4	A:-1Y8640
14	BN-14109-51300		SHIM	ｼﾑ	4	A:-1Y8640
15	BN-1C010-51060		RACK,CONTROL	ﾗｯｸ	1	A:-1Y8640
16	BN-15221-51382		SLEEVE,CONTROL	ｽﾘｰﾌﾞ	4	A:-1Y8640
17	BN-1C010-51320		SCREW,FOLLOW	ｽｸﾘｭ	1	
18	BN-15401-96650		GASKET	ｶﾞｽｹｯﾄ	2	
19	BN-14611-51200		O RING	Oﾘﾝｸﾞ	4	A:-1Y8640
20	BN-14601-98310	*	SHIM	ｼﾑ	4	A:-1Y8640
						t=0.10mm
-	BN-14601-98320	*	SHIM	ｼﾑ	4	A:-1Y8640
						t=0.20mm
-	BN-14601-98330	*	SHIM	ｼﾑ	4	A:-1Y8640
						t=0.25mm
-	BN-14601-98340	*	SHIM	ｼﾑ	4	A:-1Y8640
						t=0.30mm
-	BN-14601-98350	*	SHIM	ｼﾑ	4	A:-1Y8640
						t=0.35mm
-	BN-15221-51490	*	SHIM	ｼﾑ	4	A:-1Y8640
						t=0.40mm
-	BN-14601-98370	*	SHIM	ｼﾑ	4	A:-1Y8640
						t=0.45mm
-	BN-14601-98380	*	SHIM	ｼﾑ	4	A:-1Y8640
						t=0.50mm
-	BN-14601-98390	*	SHIM	ｼﾑ	4	A:-1Y8640
						t=0.55mm
-	BN-14109-51300	*	SHIM	ｼﾑ	4	A:-1Y8640
						t=0.60mm
-	BN-14601-98410	*	SHIM	ｼﾑ	4	A:-1Y8640
						t=0.65mm
-	BN-14601-98420	*	SHIM	ｼﾑ	4	A:-1Y8640
						t=0.70mm
-	BN-14601-98430	*	SHIM	ｼﾑ	4	A:-1Y8640
						t=0.80mm

FIG. 23 INJECTION PUMP(INNER PARTS)
(EKVB1740) ｲﾝｼﾞｪｸｼｮﾝﾎﾟﾝﾌﾟ(ｲﾝﾅﾊﾟｰﾂ)

KIT

K1 901

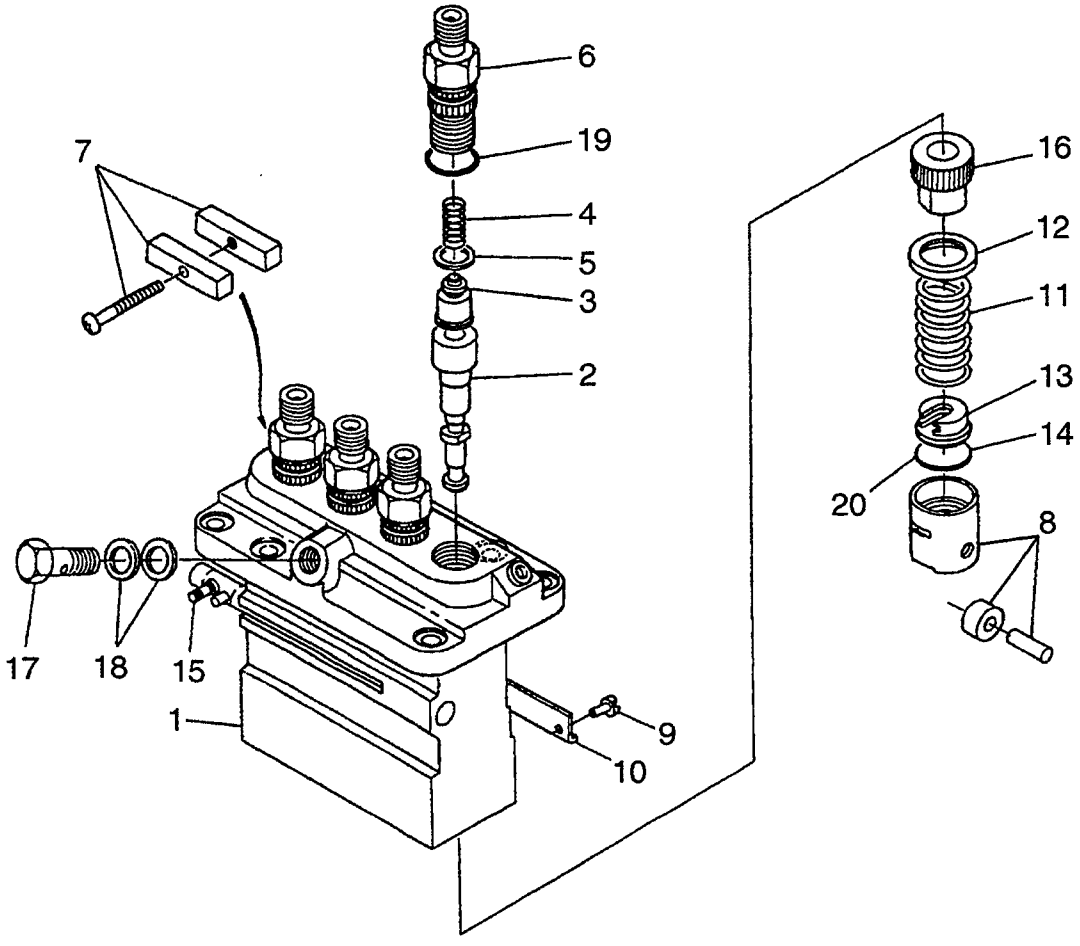

FIG.23
(EKVB1740)

A: V3300-BF-TCM-1 B: V3300-BF-TCM1OC C: V3300-EBF-TCM-1

Item No. 見出番号	Part No. 部品番号	Mark 記号	Description 部品名称	Req'd 個数	Remarks : serial No. 備考：実施号車
20	BN-14601-98440	*	SHIM シム	4	A:-1Y8640 t=0.90mm
-	BN-14601-98450	*	SHIM シム	4	A:-1Y8640 t=1.00mm
-	BN-14601-98460	*	SHIM シム	4	A:-1Y8640 t=1.10mm
-	BN-14601-98470	*	SHIM シム	4	A:-1Y8640 t=1.20mm
-	BN-14601-98480	*	SHIM シム	4	A:-1Y8640 t=1.30mm
-	BN-14601-98490	*	SHIM シム	4	A:-1Y8640 t=1.40mm

FIG. 24 INJECTION PUMP HOUSING
(EKVB1750) ｲﾝｼﾞｪｸｼｮﾝﾎﾟﾝﾌﾟﾊｳｼﾞﾝｸﾞ

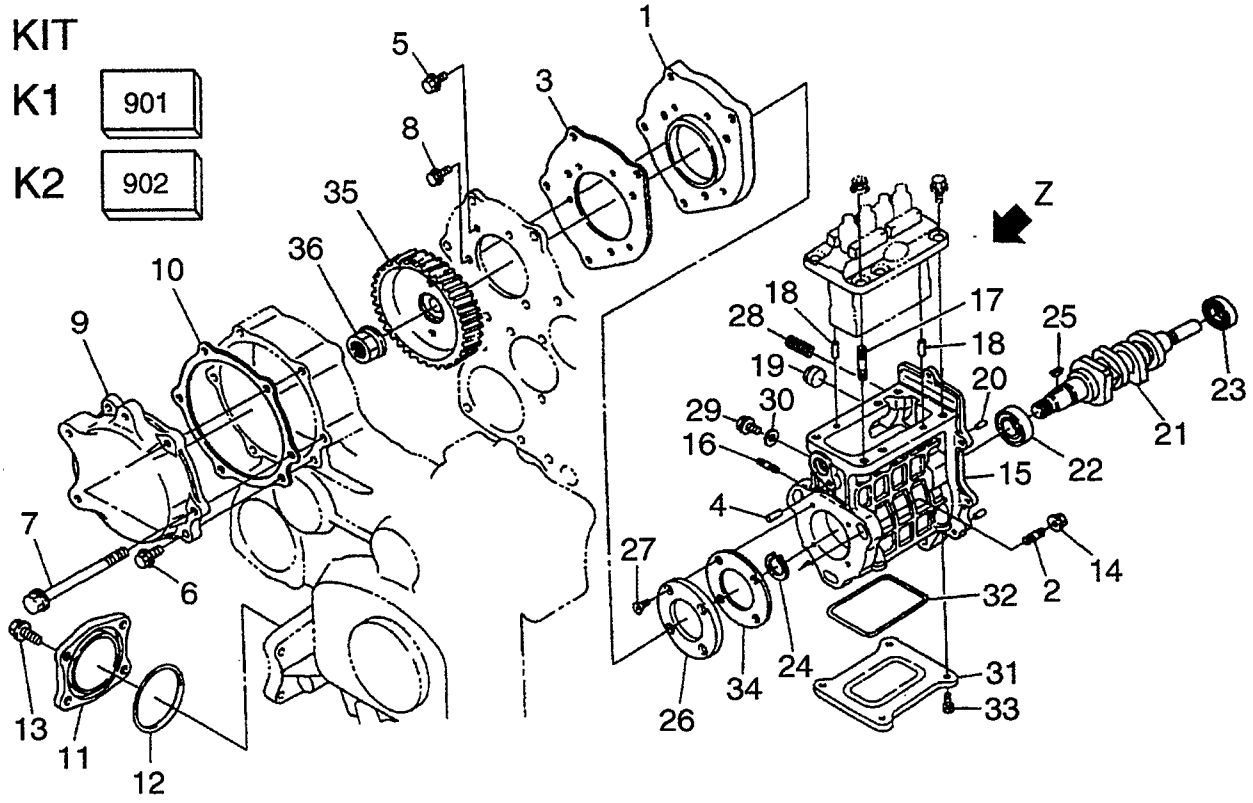

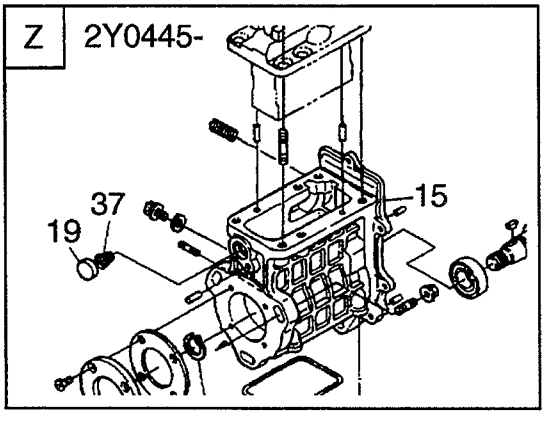

A: V3300-BF-TCM-1 B: V3300-BF-TCM1OC C: V3300-EBF-TCM-1

Item No. 見出番号	Part No. 部品番号	Mark 記号	Description 部品名称		Req'd 個数	Remarks : serial No. 備考：実施号車
901	BN-07916-27326	K1	UPPER OVERHAUL GASKET KIT	ｱｯﾊﾟｵｰﾊﾞﾎｰﾙ ｶﾞｽｹｯﾄｷｯﾄ	1	A&C INC.30 & etc.
902	BN-07916-27336	K2	LOWER OVERHAUL GASKET KIT	ﾛｱｰｵｰﾊﾞﾎｰﾙ ｶﾞｽｹｯﾄｷｯﾄ	1	A&C INC.3,10,30,32,34 & etc.
1	BN-1C010-51170		BASE,INJECTION PUMP	ﾍﾞｰｽ	1	A&B&C:-3B0113
-	BN-1C010-51174		BASE,INJECTION PUMP	ﾍﾞｰｽ	1	A&B&C:3C0416-
2	BN-01513-60825		STUD	ｽﾀｯﾄﾞ	3	
3	BN-1C010-51180	*	GASKET	ｶﾞｽｹｯﾄ	1	
4	BN-05012-00614		PIN	ﾋﾟﾝ	1	
5	BN-01754-50816		BOLT	ﾎﾞﾙﾄ	3	A&B&C:-2X0970
-	BN-01754-50814		BOLT	ﾎﾞﾙﾄ	3	A&B&C:2Y0445-
6	BN-01754-50820		BOLT	ﾎﾞﾙﾄ	1	
7	BN-01754-50875		BOLT	ﾎﾞﾙﾄ	5	A&B&C:-2X0970
-	BN-01754-50870		BOLT	ﾎﾞﾙﾄ	5	A&B&C:2Y0445-
8	BN-01754-50614		BOLT	ﾎﾞﾙﾄ	3	
9	BN-1C010-51650		COVER	ｶﾊﾞｰ	1	
-	BN-1C025-51650		COVER	ｶﾊﾞｰ	1	
10	BN-1C010-51660	*	GASKET	ｶﾞｽｹｯﾄ	1	
11	BN-1C010-32880		COVER	ｶﾊﾞｰ	1	
12	BN-19202-96830		O RING	Oﾘﾝｸﾞ	1	
13	BN-01754-50820		BOLT	ﾎﾞﾙﾄ	4	
A1	BN-1K012-50050		INJECTION PUMP ASSY	ｲﾝｼﾞｪｸｼｮﾝﾎﾟﾝﾌﾟ ｱｯｾﾝ	1	A&B&C:-2D0149 INC.15-33 & etc.
-	BN-1K012-50056		INJECTION PUMP ASSY	ｲﾝｼﾞｪｸｼｮﾝﾎﾟﾝﾌﾟ ｱｯｾﾝ	1	A&B&C:2E0445-3H2510 INC.15-33,37 & etc.
-	BN-1K012-50057		INJECTION PUMP ASSY	ｲﾝｼﾞｪｸｼｮﾝﾎﾟﾝﾌﾟ ｱｯｾﾝ	1	A&B&C:3J0001- INC.15-33,37 & etc.
14	BN-02751-50080		NUT	ﾅｯﾄ	3	
15	BN-1C010-50800		HOUSING	ﾊｳｼﾞﾝｸﾞ	1	A&B&C:-2X0970 INC.16-20
-	BN-1K012-50800		HOUSING	ﾊｳｼﾞﾝｸﾞ	1	A&B&C:2Y0445- INC.16-20
16	BN-01513-50616		STUD	ｽﾀｯﾄﾞ	2	
17	BN-01513-50818		STUD	ｽﾀｯﾄﾞ	3	
18	BN-05012-00609		PIN	ﾋﾟﾝ	2	
19	BN-1C010-55140		PLUG	ﾌﾟﾗｸﾞ	1	
20	BN-05012-00512		PIN	ﾋﾟﾝ	2	
21	BN-1C010-16170		CAMSHAFT,FUEL	ｶﾑｼｬﾌﾄ	1	A&B:-2M0854
-	BN-1C010-16172		CAMSHAFT,FUEL	ｶﾑｼｬﾌﾄ	1	A&B:2N0462-, C
22	BN-08153-06304		BEARING	ﾍﾞｱﾘﾝｸﾞ	1	
23	BN-08101-06203		BEARING	ﾍﾞｱﾘﾝｸﾞ	1	
24	BN-04612-00200		CIRCLIP	ｻｰｸﾘｯﾌﾟ	1	
25	BN-12331-95230		KEY	ｷｰ	1	
26	BN-1C020-16320		STOPPER	ｽﾄｯﾊﾟ	1	
27	BN-03016-50616		SCREW	ｽｸﾘｭ	4	
28	BN-03651-50830		SCREW SET	ｽｸﾘｭｾｯﾄ	2	
29	BN-01754-50814		BOLT	ﾎﾞﾙﾄ	2	
30	BN-15021-33660	*	GASKET	ｶﾞｽｹｯﾄ	2	
31	BN-1C010-16210		COVER	ｶﾊﾞｰ	1	
32	BN-1C010-16220	*	GASKET	ｶﾞｽｹｯﾄ	1	

FIG. 24 INJECTION PUMP HOUSING
(EKVB1750) ｲﾝｼﾞｪｸｼｮﾝﾎﾟﾝﾌﾟﾊｳｼﾞﾝｸﾞ

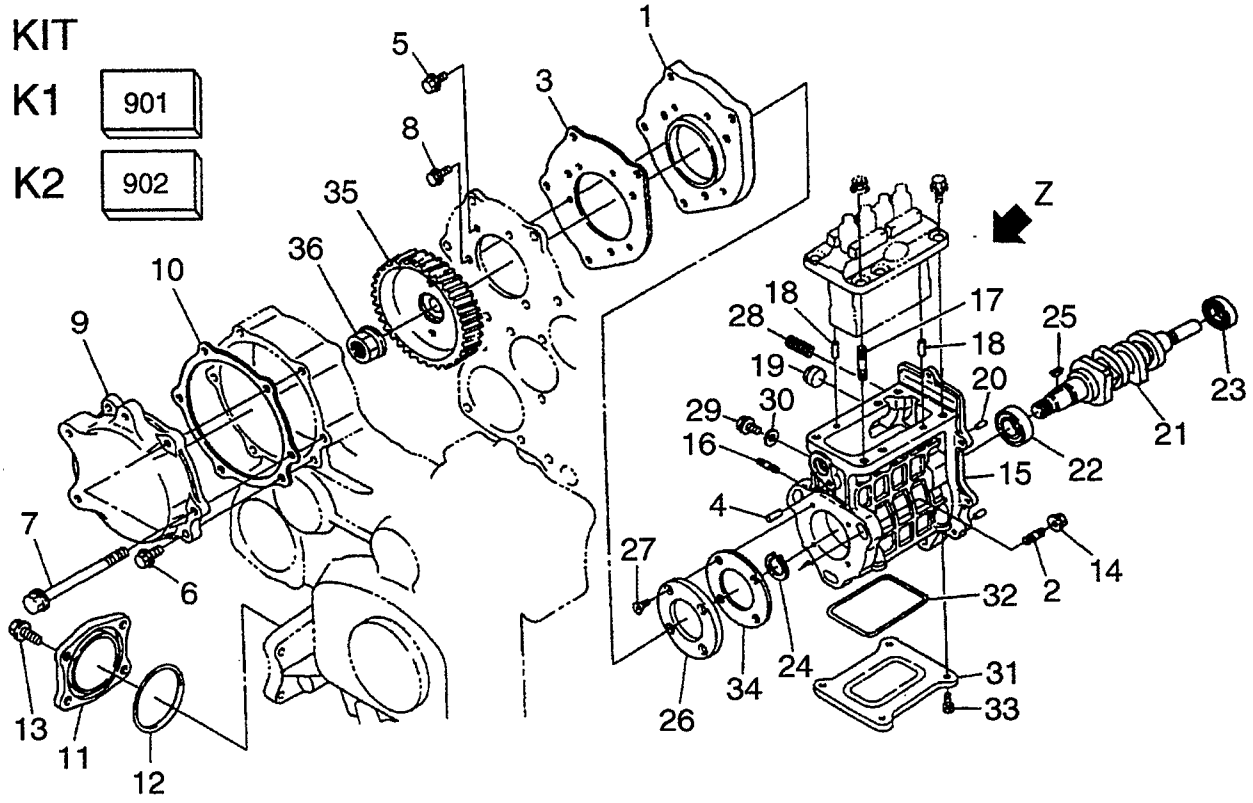

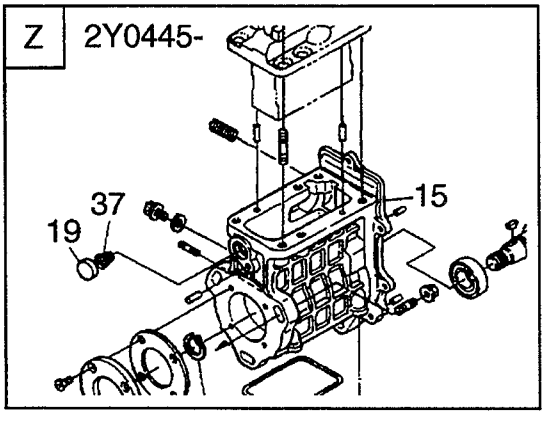

FIG.24

(EKVB1750)

A: V3300-BF-TCM-1 B: V3300-BF-TCM1OC C: V3300-EBF-TCM-1

Item No. 見出番号	Part No. 部品番号	Mark 記号	Description 部品名称		Req'd 個数	Remarks : serial No. 備考：実施号車
33	BN-13901-91020		BOLT	ﾎﾞﾙﾄ	4	
34	BN-1C010-52130	*	GASKET	ｶﾞｽｹｯﾄ	1	
35	BN-1C010-51152		GEAR	ｷﾞﾔｰ	1	
36	BN-02776-50140		NUT	ﾅｯﾄ	1	
37	BN-1K012-54260		SPRING	ｽﾌﾟﾘﾝｸﾞ	1	A&B&C:2Y0445-

FIG. 25 GOVERNOR
(EKVB1760) ｶﾞﾊﾞﾅ

KIT

K1 901

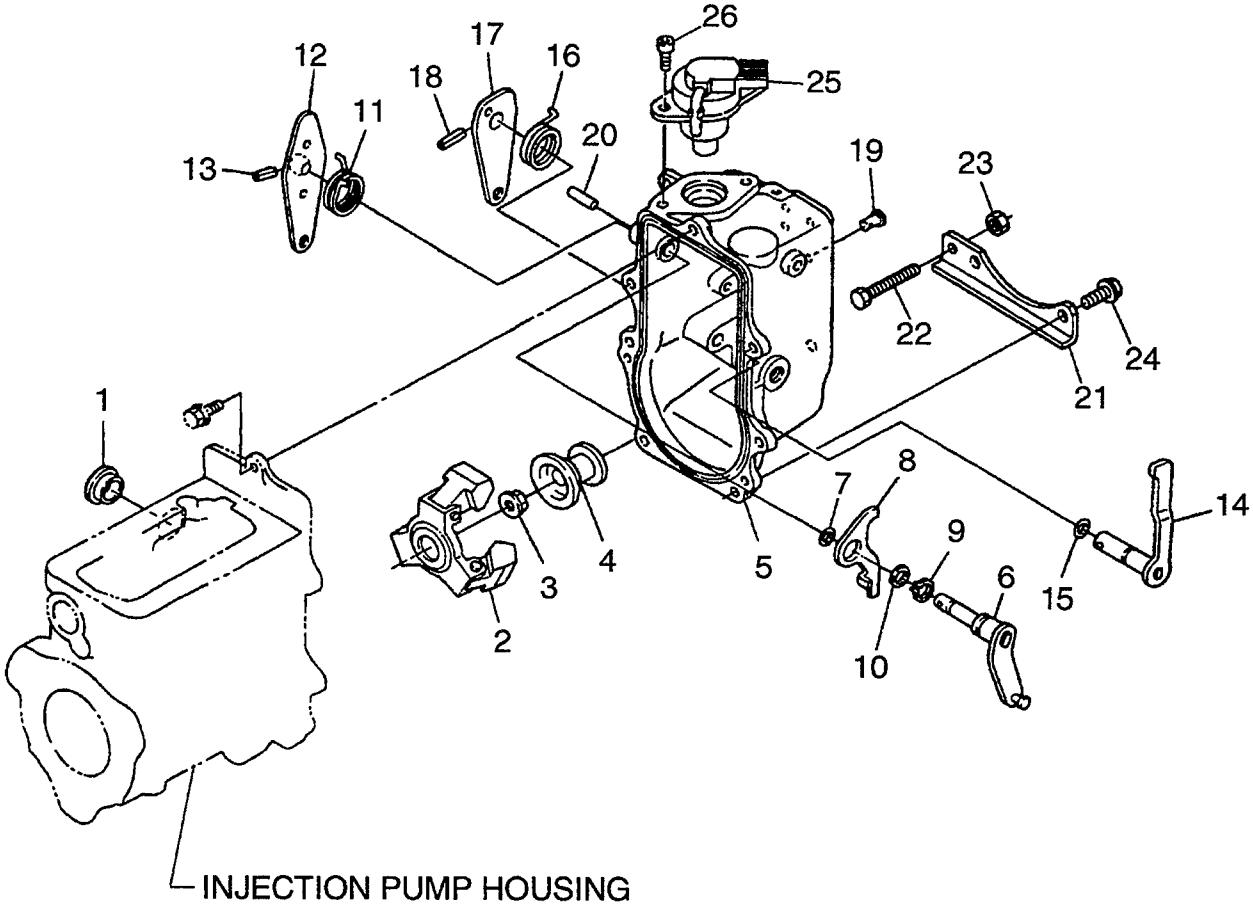

FIG.25

(EKVB1760)

A: V3300-BF-TCM-1 B: V3300-BF-TCM1OC C: V3300-EBF-TCM-1

Item No. 見出番号	Part No. 部品番号	Mark 記号	Description 部品名称		Req'd 個数	Remarks : serial No. 備考：実施号車
A1	BN-1K012-50050		INJECTION PUMP ASSY	ｲﾝｼﾞｪｸｼｮﾝﾎﾟﾝﾌﾟ ｱｯｾﾝ	1	A&B&C:-2D0149 INC.1-26 & etc.
-	BN-1K012-50056		INJECTION PUMP ASSY	ｲﾝｼﾞｪｸｼｮﾝﾎﾟﾝﾌﾟ ｱｯｾﾝ	1	A&B&C:2E0445-3H2510 INC.1-26 & etc.
-	BN-1K012-50057		INJECTION PUMP ASSY	ｲﾝｼﾞｪｸｼｮﾝﾎﾟﾝﾌﾟ ｱｯｾﾝ	1	A&B&C:3J0001- INC.1-26 & etc.
901	BN-07916-27336	K1	LOWER OVERHAUL GASKET KIT	ﾛｱｰｵｰﾊﾞﾎｰﾙ ｶﾞｽｹｯﾄｷｯﾄ	1	A&C INC.15 & etc.
1	BN-1C010-56750		COVER	ｶﾊﾞｰ	1	
2	BN-1C020-55050		WEIGHT	ｳｴｲﾄ	1	
3	BN-02771-50120		NUT	ﾅｯﾄ	1	
4	BN-1C020-55452		SLEEVE	ｽﾘｰﾌﾞ	1	
5	BN-1K012-55100		HOUSING	ﾊｳｼﾞﾝｸﾞ	1	A&B:-2Q9814
-	BN-1K012-55105		HOUSING	ﾊｳｼﾞﾝｸﾞ	1	A&B:2S0413-, C
6	BN-1K012-56020		LEVER	ﾚﾊﾞｰ	1	
7	BN-15471-57980		SEAL,OIL	ｼｰﾙ	1	
8	BN-1C010-60150		LEVER,STOP	ﾚﾊﾞｰ	1	
9	BN-04613-50120		CIRCLIP	ｻｰｸﾘｯﾌﾟ	1	
10	BN-15221-14430		WASHER	ﾜｯｼｬ	1	
11	BN-1C010-57510		SPRING	ｽﾌﾟﾘﾝｸﾞ	1	A&B:-2Q9814
-	BN-1C010-57512		SPRING	ｽﾌﾟﾘﾝｸﾞ	1	A&B:2S0413-, C
12	BN-1C010-57150		LEVER,SPEED CONTROL	ﾚﾊﾞｰ	1	A&B:-2Q9814
-	BN-1K012-57150		LEVER,SPEED CONTROL	ﾚﾊﾞｰ	1	A&B:2S0413-, C
13	BN-05411-00416		PIN	ﾋﾟﾝ	1	
14	BN-1C010-57700		LEVER,ENGINE STOP	ﾚﾊﾞｰ	1	
15	BN-04811-10070		O RING	Oﾘﾝｸﾞ	1	A&B:-2Q9814
-	BN-04814-10070	*	O RING	Oﾘﾝｸﾞ	1	A&B:2S0413-, C
16	BN-15471-57920		SPRING,RETURN	ｽﾌﾟﾘﾝｸﾞ	1	
17	BN-1C010-57620		LEVER,ENGINE STOP	ﾚﾊﾞｰ	1	
18	BN-05411-00416		PIN	ﾋﾟﾝ	1	
19	BN-15221-56280		PIN	ﾋﾟﾝ	1	
20	BN-1C010-94510		PIN	ﾋﾟﾝ	1	
21	BN-1K012-58570		STAY	ｽﾃｰ	1	
22	BN-19202-91010		BOLT	ﾎﾞﾙﾄ	1	
23	BN-02056-50060		NUT	ﾅｯﾄ	1	
24	BN-01754-50622		BOLT	ﾎﾞﾙﾄ	2	
25	BN-1C010-60014		SOLENOID,STOP	ｿﾚﾉｲﾄﾞ	1	
26	BN-01311-10616		BOLT	ﾎﾞﾙﾄ	2	

FIG. 26 FORK LEVER (GOVERNOR)
(EKVB1770) フォークレバー(ガバナ)

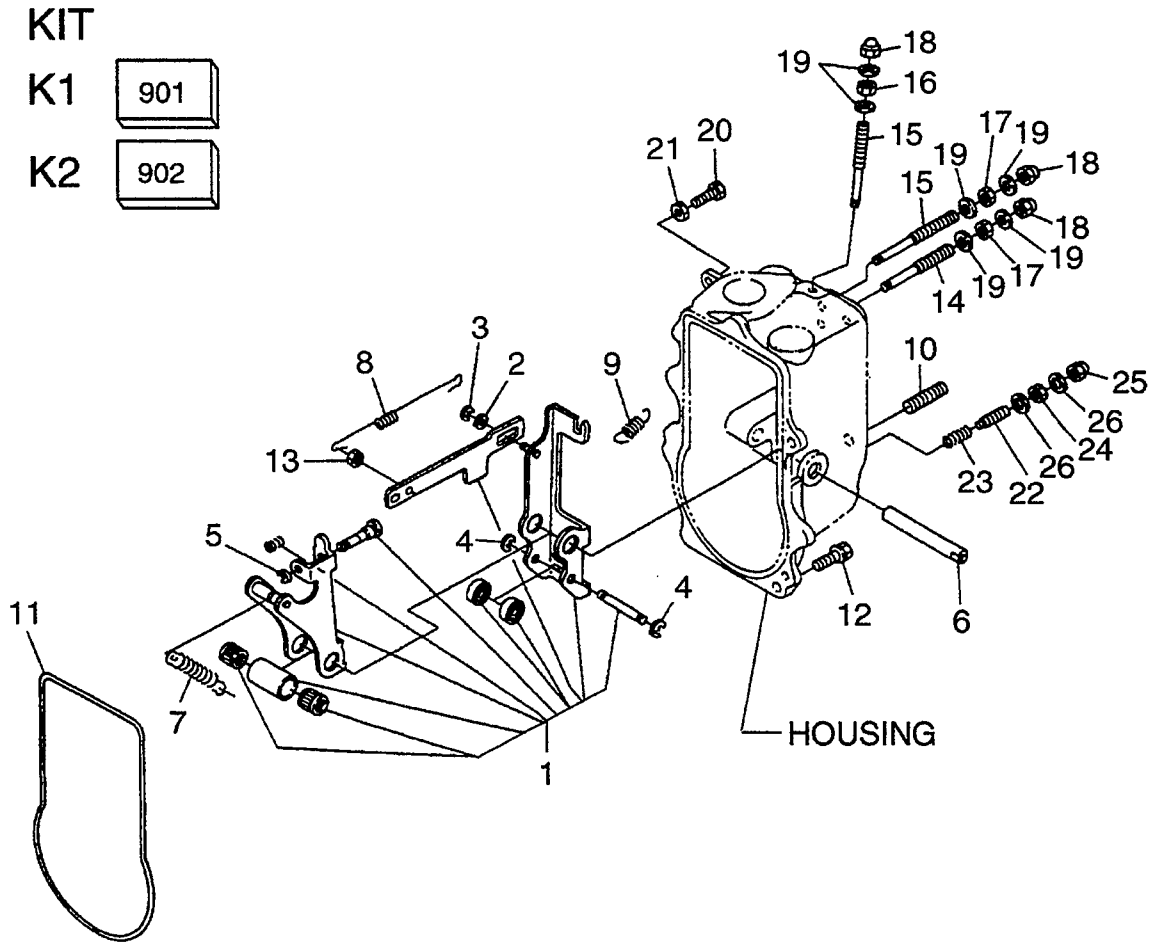

FIG.26

(EKVB1770)

A: V3300-BF-TCM-1 B: V3300-BF-TCM1OC C: V3300-EBF-TCM-1

Item No. 見出番号	Part No. 部品番号	Mark 記号	Description 部品名称		Req'd 個数	Remarks : serial No. 備考：実施号車
A1	BN-1K012-50050		INJECTION PUMP ASSY	ｲﾝｼﾞｪｸｼｮﾝﾎﾟﾝﾌﾟ ｱｯｾﾝ	1	A&B&C:-2D0149 INC.1-26 & etc.
-	BN-1K012-50056		INJECTION PUMP ASSY	ｲﾝｼﾞｪｸｼｮﾝﾎﾟﾝﾌﾟ ｱｯｾﾝ	1	A&B&C:2E0445-3H2510 INC.1-26 & etc.
-	BN-1K012-50057		INJECTION PUMP ASSY	ｲﾝｼﾞｪｸｼｮﾝﾎﾟﾝﾌﾟ ｱｯｾﾝ	1	A&B&C:3J0001- INC.1-26 & etc.
901	BN-07916-27326	K1	UPPER OVERHAUL GASKET KIT	ｱｯﾊﾟｰｵｰﾊﾞｰﾎｰﾙ ｶﾞｽｹｯﾄｷｯﾄ	1	A&C INC.19,26 & etc.
902	BN-07916-27336	K2	LOWER OVERHAUL GASKET KIT	ﾛｱｰｵｰﾊﾞｰﾎｰﾙ ｶﾞｽｹｯﾄｷｯﾄ	1	A&C INC.11,19,26 & etc.
1	BN-1C010-56030		LEVER,FORK	ﾚﾊﾞｰ	1	INC.2-5
2	BN-04013-60050		WASHER	ﾜｯｼｬ	1	
3	BN-04613-50040		CIRCLIP	ｻｰｸﾘｯﾌﾟ	1	
4	BN-04613-50050		CIRCLIP	ｻｰｸﾘｯﾌﾟ	2	
5	BN-04613-50030		CIRCLIP	ｻｰｸﾘｯﾌﾟ	1	
6	BN-1C010-56150		SHAFT	ｼｬﾌﾄ	1	
7	BN-1K012-56410		SPRING	ｽﾌﾟﾘﾝｸﾞ	1	A&B&C:-3H2510
-	BN-1K012-56412		SPRING	ｽﾌﾟﾘﾝｸﾞ	1	A&B&C:3J0001-
8	BN-1K012-56480		SPRING	ｽﾌﾟﾘﾝｸﾞ	1	
9	BN-1C010-57920		SPRING	ｽﾌﾟﾘﾝｸﾞ	1	
10	BN-01518-50820		STUD	ｽﾀｯﾄﾞ	2	
11	BN-1C010-55770	*	GASKET	ｶﾞｽｹｯﾄ	1	
12	BN-01754-50618		BOLT	ﾎﾞﾙﾄ	5	
13	BN-02556-50050		NUT,LOCK	ﾅｯﾄ	1	A&B:-2Q9814
-	BN-1C010-92020		NUT,LOCK	ﾅｯﾄ	1	A&B:2S0413-, C
14	BN-1C010-54150		BOLT	ﾎﾞﾙﾄ	1	
15	BN-1C010-54120		BOLT	ﾎﾞﾙﾄ	2	
16	BN-15841-92020		NUT	ﾅｯﾄ	1	
17	BN-1G031-54210		NUT	ﾅｯﾄ	2	
18	BN-15841-92330		NUT	ﾅｯﾄ	3	
19	BN-15601-96650	*	GASKET	ｶﾞｽｹｯﾄ	6	
20	BN-15108-57280		STOPPER	ｽﾄｯﾊﾟ	1	
21	BN-02056-50060		NUT	ﾅｯﾄ	1	
22	BN-15841-54100		BOLT	ﾎﾞﾙﾄ	1	INC.23
23	BN-15841-54260		SPRING	ｽﾌﾟﾘﾝｸﾞ	1	
24	BN-15261-92020		NUT	ﾅｯﾄ	1	
25	BN-15841-54220		NUT	ﾅｯﾄ	1	
26	BN-15021-33660	*	GASKET	ｶﾞｽｹｯﾄ	2	

FIG. 27 FUEL FILTER
(EKVB1780) フューエルフィルタ

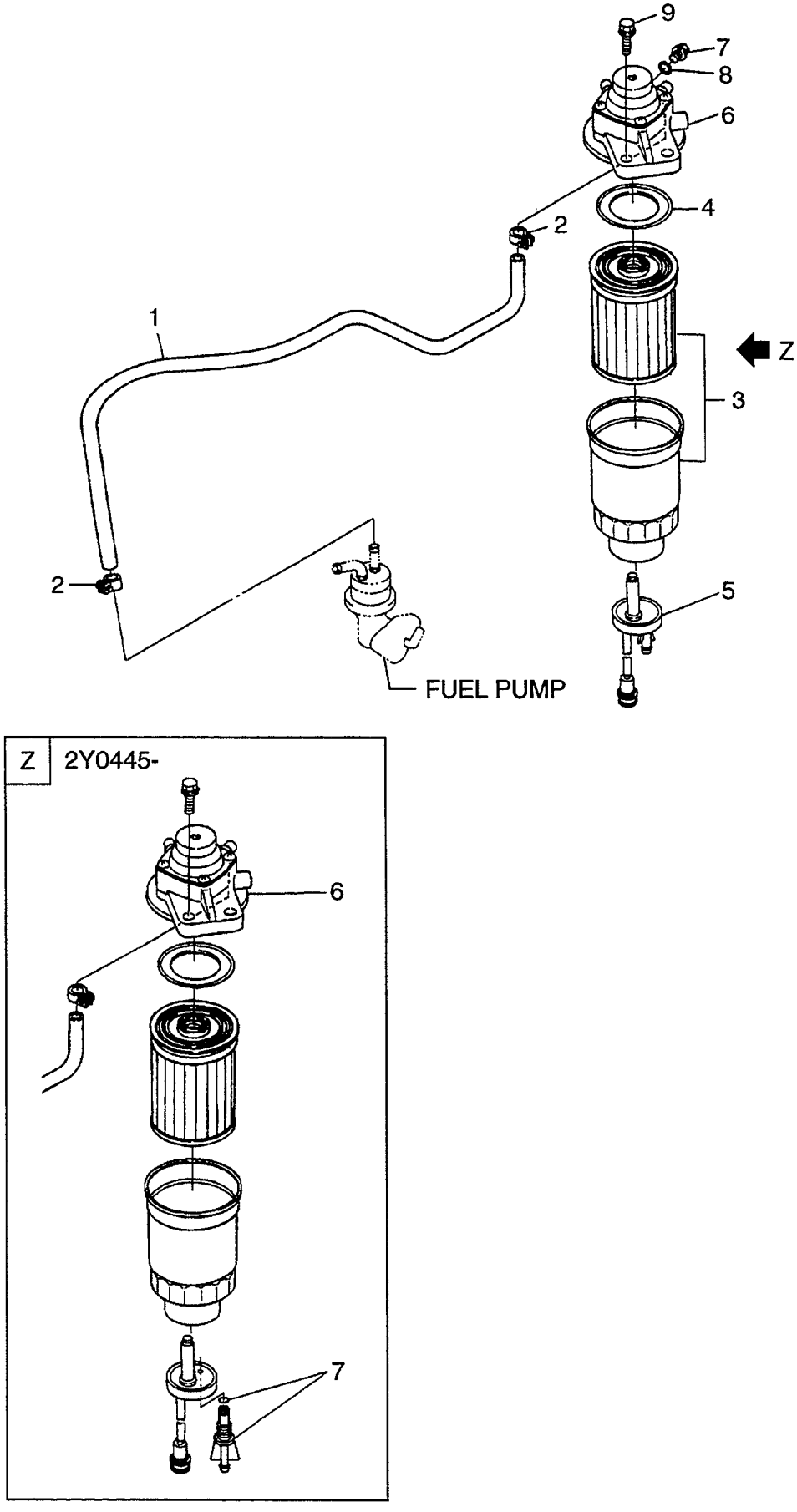

A: V3300-BF-TCM-1 B: V3300-BF-TCM1OC C: V3300-EBF-TCM-1

Item No. 見出番号	Part No. 部品番号	Mark 記号	Description 部品名称		Req'd 個数	Remarks : serial No. 備考：実施号車
A1	BN-1K011-42020		TUBE ASSY	ﾁｭｰﾌﾞｱｯｾﾝ	1	A&B:-2Q9814 INC.1,2
-	BN-1K012-42020		TUBE ASSY	ﾁｭｰﾌﾞｱｯｾﾝ	1	A&B:2S0413-, C INC.1,2
1	BN-09661-70625		TUBE	ﾁｭｰﾌﾞ	1	A&B:-2Q9814
-	BN-09661-70550		TUBE	ﾁｭｰﾌﾞ	1	A&B:2S0413-, C
2	BN-14301-42750		CLIP	ｸﾘｯﾌﾟ	2	
A2	BN-1K012-43010		FUEL FILTER ASSY	ﾌｭｰｴﾙﾌｨﾙﾀｱｯｾﾝ	1	A&B&C:-2X0970 INC.3-8
-	BN-1K012-43012		FUEL FILTER ASSY	ﾌｭｰｴﾙﾌｨﾙﾀｱｯｾﾝ	1	A&B&C:2Y0445- INC.3-7
3	BN-1K011-43060		ELEMENT KIT	ｴﾚﾒﾝﾄｷｯﾄ	1	INC.4
4	BN-1K011-43140	*	GASKET	ｶﾞｽｹｯﾄ	1	
5	BN-1K012-43800		SENSOR	ｾﾝｻ	1	
6	BN-1K011-43200		BODY	ﾎﾞﾃﾞｰ	1	A&B&C:-2X0970 INC.7,8
-	BN-1K012-43200		BODY	ﾎﾞﾃﾞｰ	1	A&B&C:2Y0445- INC.7
7	BN-1K011-43280		PLUG	ﾌﾟﾗｸﾞ	1	A&B&C:-2X0970
-	BN-1K011-43890		PLUG	ﾌﾟﾗｸﾞ	1	A&B&C:2Y0445-
8	BN-14301-43290		O RING	Oﾘﾝｸﾞ	1	A&B&C:-2X0970
9	BN-01774-51030		BOLT	ﾎﾞﾙﾄ	2	

FIG. 28 SEDIMENTER
ｾｼﾞﾒﾝﾀ

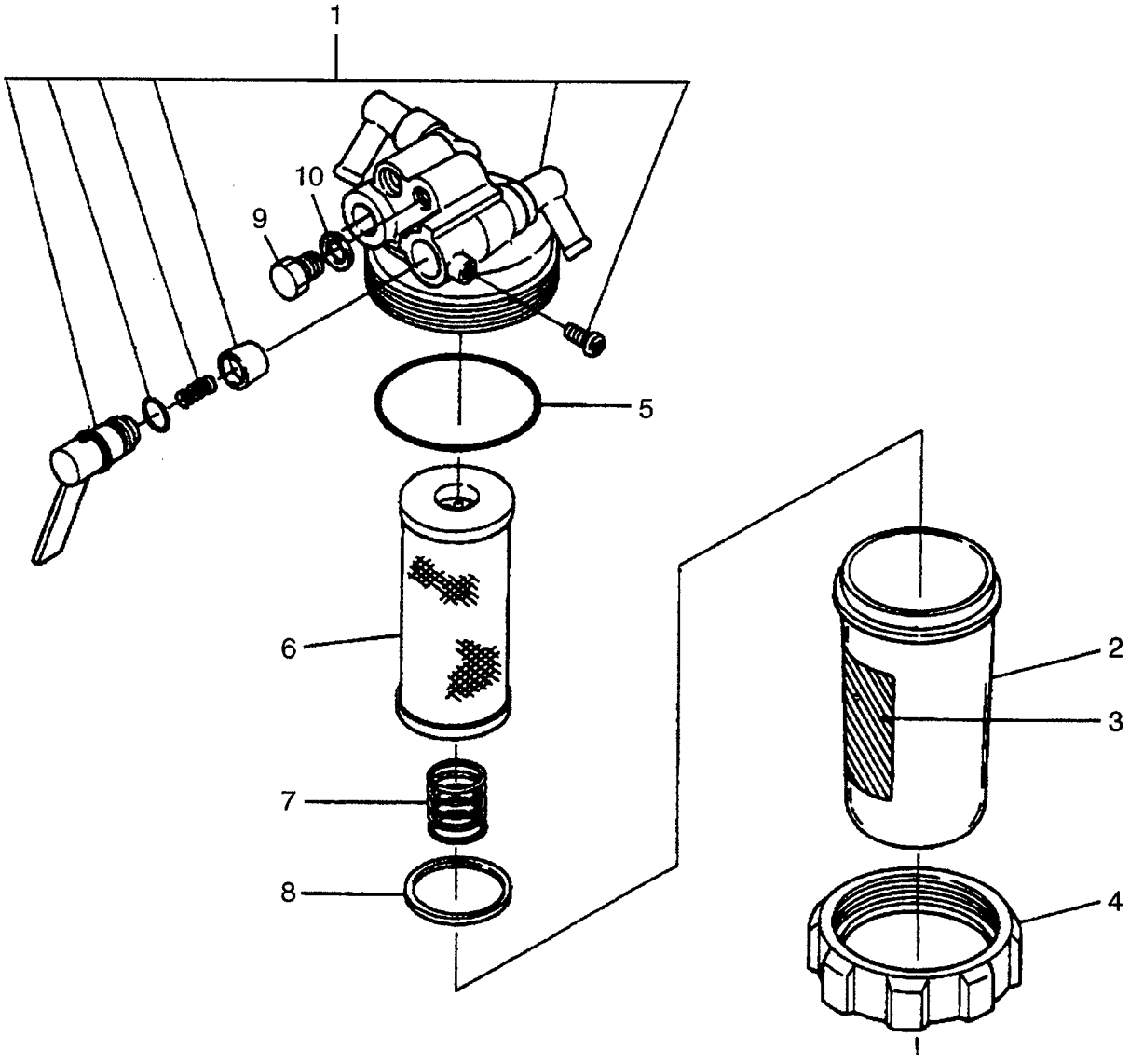

A: V3300-BF-TCM-1 B: V3300-BF-TCM1OC C: V3300-EBF-TCM-1

Item No. 見出番号	Part No. 部品番号	Mark 記号	Description 部品名称		Req'd 個数	Remarks : serial No. 備考：実施号車
A1	BN-15831-43353		SEDIMENTER ASSY	ｾﾃﾞﾒﾝﾀｱｯｾﾝ	1	INC.1-10
1	BN-15831-43110		BODY	ﾎﾞﾃﾞｰ	1	
A2	BN-15831-43100		CUP ASSY	ｶｯﾌﾟｱｯｾﾝ	1	INC.2,3
2	BN-16271-43580		CUP,FILTER	ｶｯﾌﾟ	1	
3	BN-15831-87462		LABEL	ﾗﾍﾞﾙ	1	
4	BN-16271-43590		RING,RETAINING	ﾘﾝｸﾞ	1	
5	BN-16271-43570		O RING	Oﾘﾝｸﾞ	1	
6	BN-15831-43380		ELEMENT	ｴﾚﾒﾝﾄ	1	
7	BN-15831-43930		SPRING	ｽﾌﾟﾘﾝｸﾞ	1	
8	BN-15831-43250		FLOAT	ﾌﾛｰﾄ	1	
9	BN-15231-43283		SCREW,AIR BREATHER	ｽｸﾘｭ	1	
10	BN-04817-00060		O RING	Oﾘﾝｸﾞ	1	

FIG. 29 STARTER MOUNT
(EKVB1810) スタータマウント

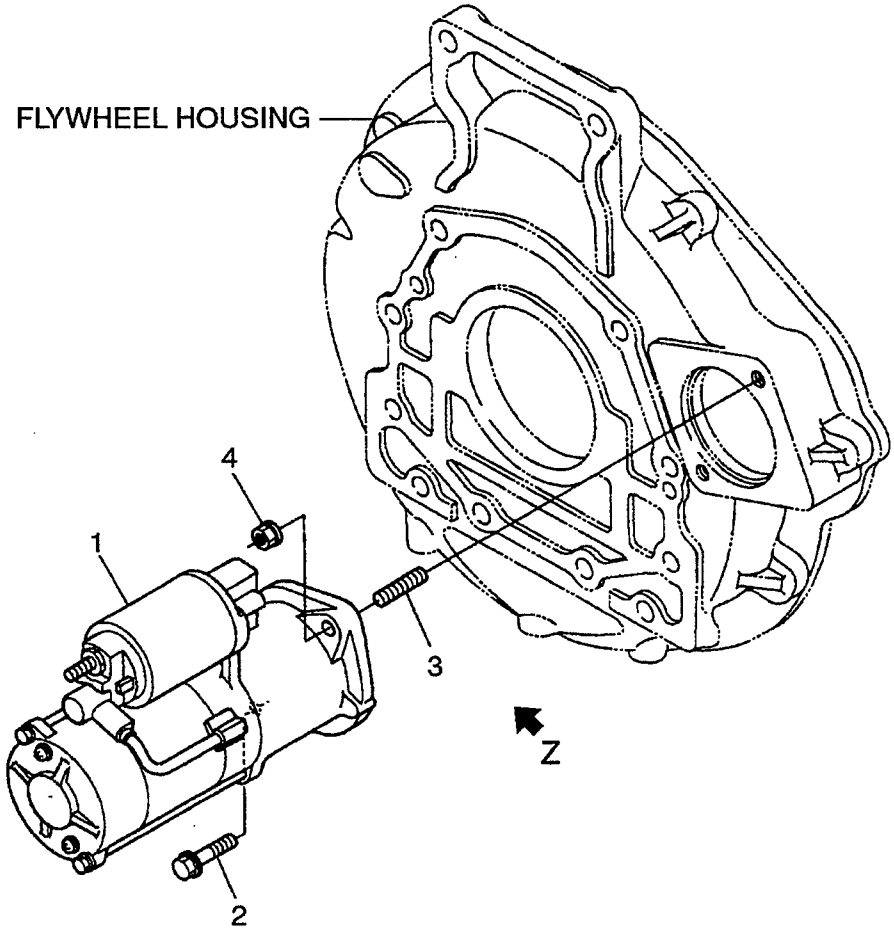

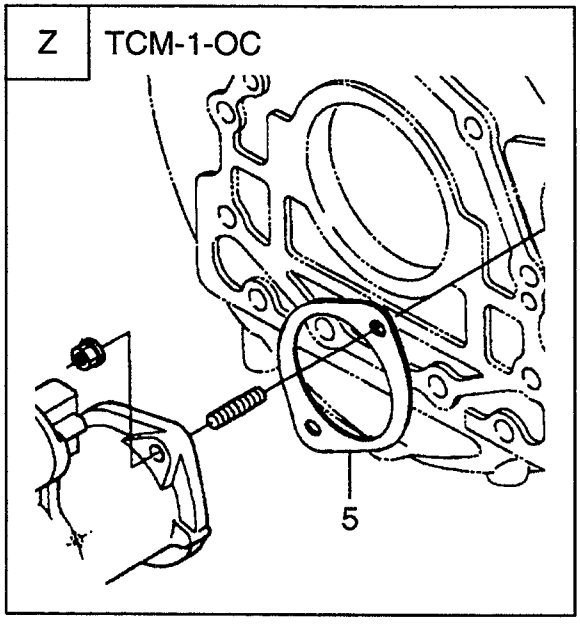

FIG.29

(EKVB1810)

A: V3300-BF-TCM-1 B: V3300-BF-TCM1OC C: V3300-EBF-TCM-1

Item No. 見出番号	Part No. 部品番号	Mark 記号	Description 部品名称	Req'd 個数	Remarks : serial No. 備考：実施号車
1	BN-1K012-63010		STARTER ｽﾀｰﾀ	1	A, C SEE FIG.30
-	BN-1G373-63010		STARTER ｽﾀｰﾀ	1	B SEE FIG.30
2	BN-01774-51035		BOLT ﾎﾞﾙﾄ	1	A,B
3	BN-01517-61030		STUD ｽﾀｯﾄﾞ	1	A,B
4	BN-02771-60100		NUT ﾅｯﾄ	1	A,B
5	BN-1G373-63580		GASKET ｶﾞｽｹｯﾄ	1	B

FIG. 30 STARTER(INNER PARTS)
(EKVB1820) スタータ(インナパーツ)

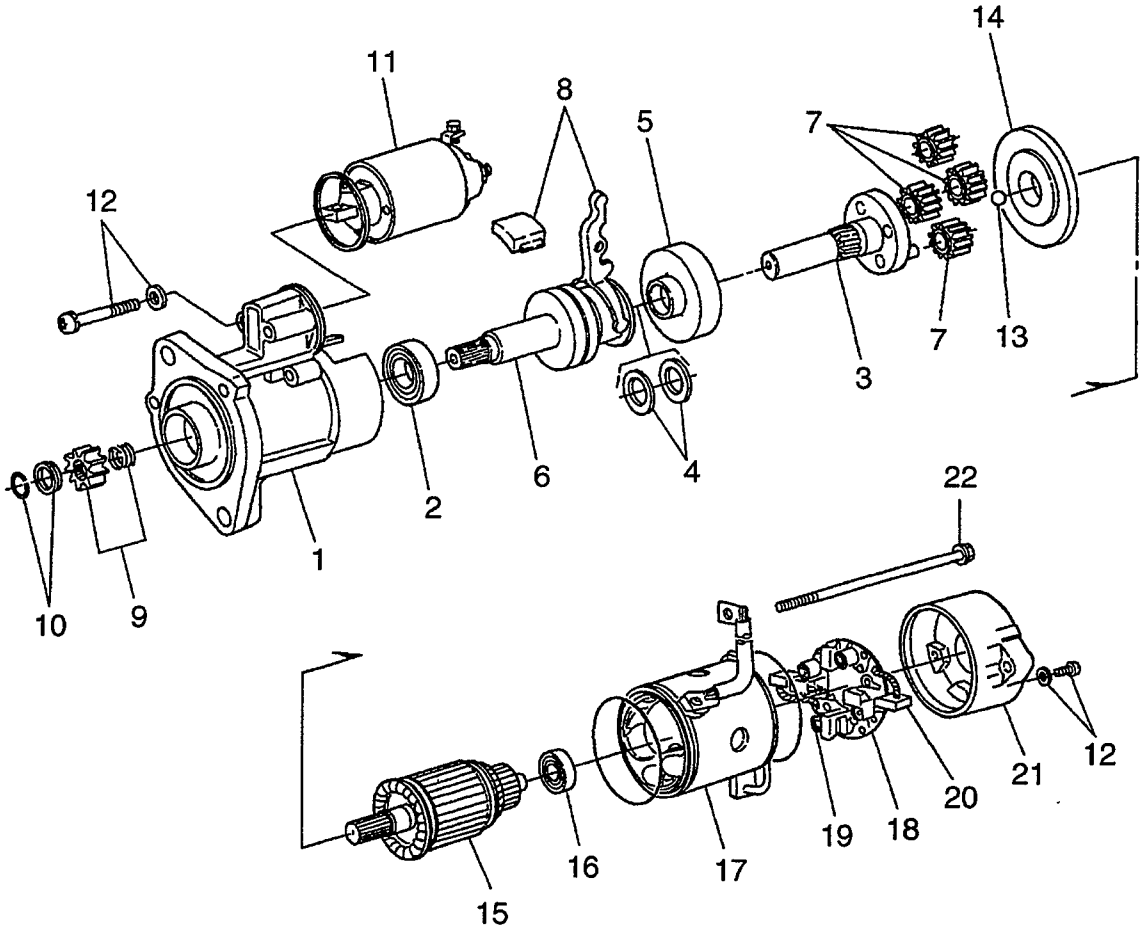

A: V3300-BF-TCM-1 B: V3300-BF-TCM1OC C: V3300-EBF-TCM-1

Item No. 見出番号	Part No. 部品番号	Mark 記号	Description 部品名称		Req'd 個数	Remarks : serial No. 備考：実施号車
A1	BN-1K012-63010		STARTER ASSY	ｽﾀｰﾀｱｯｾﾝ	1	A, C INC.1-22 12V 3.0KW
-	BN-1G373-63010		STARTER ASSY	ｽﾀｰﾀｱｯｾﾝ	1	B INC.1-22 12V 3.0KW
1	BN-1K012-63030		BRACKET,FRONT	ﾌﾞﾗｹｯﾄ	1	A, C INC.2
-	BN-1G373-63030		BRACKET,FRONT	ﾌﾞﾗｹｯﾄ	1	B INC.2
2	BN-1C010-63240		BEARING SET	ﾍﾞｱﾘﾝｸﾞｾｯﾄ	1	
A2	BN-1K012-63040		SHAFT ASSY	ｼｬﾌﾄｱｯｾﾝ	1	A, C INC.3-7
-	BN-1G373-63040		SHAFT ASSY	ｼｬﾌﾄｱｯｾﾝ	1	B INC.3-7
3	BN-1K012-63210		SHAFT,GEAR	ｼｬﾌﾄ	1	
4	BN-1C010-63410		WASHER SET	ﾜｯｼｬｾｯﾄ	1	
5	BN-1C010-63260		INTERNAL GEAR SET	ｲﾝﾀｰﾅﾙｷﾞﾔｰｾｯﾄ	1	
6	BN-1C010-63330		CLUTCH,OVER RUNNING	ｸﾗｯﾁ	1	
7	BN-1C010-63270		GEAR	ｷﾞﾔｰ	4	
8	BN-1K012-63050		LEVER SET	ﾚﾊﾞｰｾｯﾄ	1	
9	BN-1K012-63280		PINION SET	ﾋﾟﾆｵﾝｾｯﾄ	1	INC.10
10	BN-1C010-63170		STOPPER SET	ｽﾄｯﾊﾟｾｯﾄ	1	
11	BN-1C010-63020		SWITCH,MAGNETIC	ｽｲｯﾁ	1	
12	BN-1K012-63760		SCREW SET	ｽｸﾘｭｾｯﾄ	1	
13	BN-6C040-82690		BALL	ﾎﾞｰﾙ	1	
14	BN-1C010-63520		PACKING SET	ﾊﾟｯｷﾝｸﾞｾｯﾄ	1	
15	BN-1K012-63070		ARMATURE	ｱｰﾏﾁｭｱ	1	INC.16
16	BN-1C010-63250		BEARING	ﾍﾞｱﾘﾝｸﾞ	1	
17	BN-1K012-63080		YOKE	ﾖｰｸ	1	
18	BN-1K012-63380		HOLDER,BRUSH	ﾎﾙﾀﾞ	1	INC.19,20
19	BN-1K012-63390		BRUSH,SPRING	ﾌﾞﾗｼ	4	
20	BN-1K012-63370		BRUSH	ﾌﾞﾗｼ	2	
21	BN-1K012-63200		BRACKET,REAR	ﾌﾞﾗｹｯﾄ	1	
22	BN-1K012-63320		BOLT SET	ﾎﾞﾙﾄｾｯﾄ	1	

FIG. 31 ALTERNATOR & PULLEY
(EKVB1830) オルタネータ&プーリ

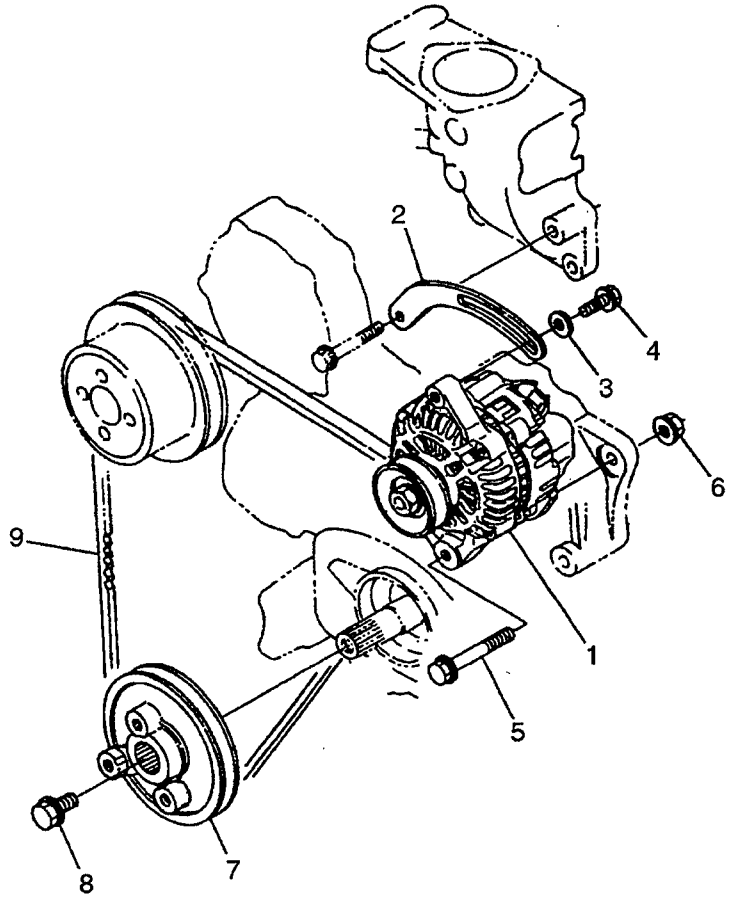

FIG.31

(EKVB1830)

A: V3300-BF-TCM-1 B: V3300-BF-TCM1OC C: V3300-EBF-TCM-1

Item No. 見出番号	Part No. 部品番号	Mark 記号	Description 部品名称		Req'd 個数	Remarks : serial No. 備考：実施号車
1	BN-1C010-64010		ALTERNATOR	ｵﾙﾀﾈｰﾀ	1	SEE FIG.32
2	BN-1C010-64420		STAY	ｽﾃｰ	1	
3	BN-04015-60080		WASHER	ﾜｯｼｬ	1	
4	BN-01754-50825		BOLT	ﾎﾞﾙﾄ	1	
5	BN-01774-51065		BOLT	ﾎﾞﾙﾄ	1	
6	BN-02771-60100		NUT	ﾅｯﾄ	1	
7	BN-1C010-74282		PULLEY	ﾌﾟｰﾘ	1	
8	BN-1C010-91010		BOLT	ﾎﾞﾙﾄ	1	
9	BN-1G541-97010		V BELT	Vﾍﾞﾙﾄ	1	

FIG. 32 ALTERNATOR(INNER PARTS)
(EKVB1840) オルタネータ(インナパーツ)

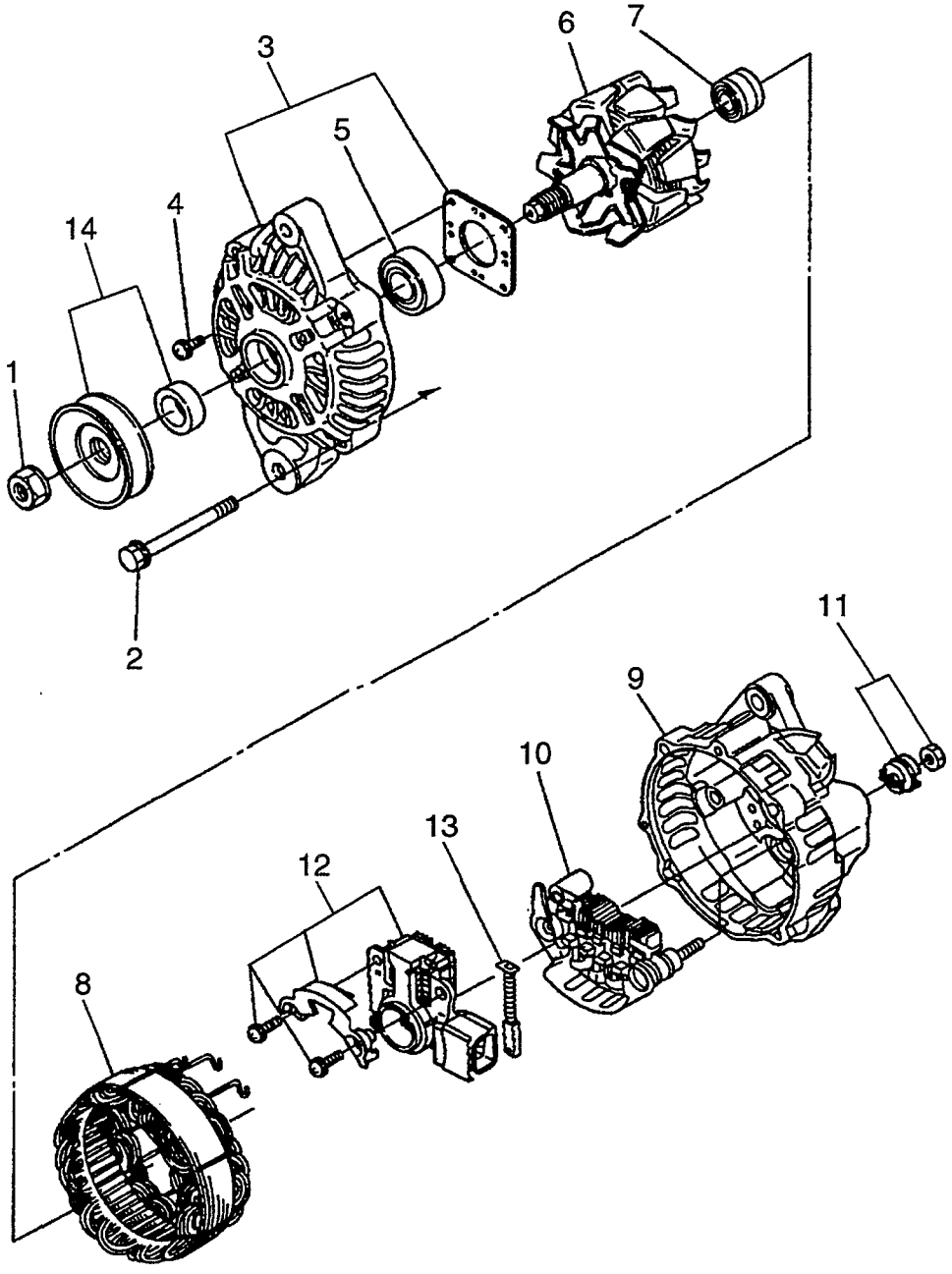

FIG.32
(EKVB1840)

A: V3300-BF-TCM-1 B: V3300-BF-TCM1OC C: V3300-EBF-TCM-1

Item No. 見出番号	Part No. 部品番号	Mark 記号	Description 部品名称		Req'd 個数	Remarks : serial No. 備考：実施号車
A	BN-1C010-64010		ALTERNATOR ASSY	ｵﾙﾀﾈｰﾀｱｯｾﾝ	1	INC.1-14 12V 45A
1	BN-1C010-92010		NUT	ﾅｯﾄ	1	
2	BN-1C010-91050		BOLT SET	ﾎﾞﾙﾄｾｯﾄ	1	
3	BN-1C010-64020		BRACKET,FRONT	ﾌﾞﾗｹｯﾄ	1	INC.4,5
4	BN-1C010-93010		BOLT SET	ﾎﾞﾙﾄｾｯﾄ	1	
5	BN-1C010-64780		BEARING	ﾍﾞｱﾘﾝｸﾞ	1	
6	BN-1C010-64120		ROTOR	ﾛｰﾀ	1	INC.7
7	BN-1C010-64770		BEARING	ﾍﾞｱﾘﾝｸﾞ	1	
8	BN-1C010-64080		STATOR	ｽﾃｰﾀ	1	
9	BN-1C010-64060		BRACKET,REAR	ﾌﾞﾗｹｯﾄ	1	INC.10-13
10	BN-1C010-64850		RECTIFIER	ﾚｸﾃｨﾌｧｲｱ	1	
11	BN-1C010-92080		NUT SET	ﾅｯﾄｾｯﾄ	1	
12	BN-1C010-64600		REGULATOR SET	ﾚｷﾞｭﾚｰﾀｾｯﾄ	1	
13	BN-1C010-64310		BRUSH SET	ﾌﾞﾗｼｾｯﾄ	1	
14	BN-1C010-64110		PULLEY	ﾌﾟｰﾘ	1	

PARTS NUMBER INDEX

PART No.	FIG.NO.	PART No.	FIG.NO.	PART No.	FIG.NO.	PART No.	FIG.NO.
BN-E9151-33140	10	BN-02751-50060	22	BN-05012-00616	5	BN-1C010-03023	9
BN-E9151-33140	16	BN-02751-50080	9	BN-05012-00820	3	BN-1C010-03023	12
BN-E9151-91020	11	BN-02751-50080	13	BN-05012-01016	3	BN-1C010-03450	9
BN-01311-10616	25	BN-02751-50080	15	BN-05411-00416	25	BN-1C010-04014	6
BN-01513-50616	24	BN-02751-50080	22	BN-05411-00416	25	BN-1C010-04017	6
BN-01513-50818	24	BN-02751-50080	24	BN-05411-00528	12	BN-1C010-04130	2
BN-01513-60825	24	BN-02761-50040	20	BN-05712-00415	8	BN-1C010-04130	6
BN-01517-61030	13	BN-02761-50040	20A	BN-05712-00415	8	BN-1C010-04162	6
BN-01517-61030	29	BN-02761-50050	20	BN-05712-00515	4	BN-1C010-04460	2
BN-01518-50820	26	BN-02761-50050	20A	BN-05712-00520	11	BN-1C010-04460	5
BN-01754-50614	24	BN-02771-50120	25	BN-06311-55030	3	BN-1C010-04560	3
BN-01754-50618	26	BN-02771-60100	29	BN-06311-85016	10	BN-1C010-05120	10
BN-01754-50622	25	BN-02771-60100	31	BN-07715-00401	4	BN-1C010-05140	10
BN-01754-50814	7	BN-02776-50140	24	BN-07715-00401	8	BN-1C010-05150	10
BN-01754-50814	8	BN-03016-50616	6	BN-07715-00401	8	BN-1C010-05200	10
BN-01754-50814	9	BN-03016-50616	24	BN-07715-01605	11	BN-1C010-05370	10
BN-01754-50814	11	BN-03024-50520	20	BN-07916-27326	1	BN-1C010-05510	10
BN-01754-50814	15	BN-03024-50520	20A	BN-07916-27326	3	BN-1C010-05670	10
BN-01754-50814	16	BN-03054-50408	10	BN-07916-27326	9	BN-1C010-11770	13
BN-01754-50814	24	BN-03054-50508	10	BN-07916-27326	10	BN-1C010-11820	1
BN-01754-50814	24	BN-03410-00808	12	BN-07916-27326	12	BN-1C010-11820	13
BN-01754-50816	18	BN-03651-50830	24	BN-07916-27326	13	BN-1C010-12310	13
BN-01754-50816	24	BN-04013-60050	26	BN-07916-27326	15	BN-1C010-12352	1
BN-01754-50820	9	BN-04015-60080	31	BN-07916-27326	16	BN-1C010-12352	13
BN-01754-50820	13	BN-04611-00300	4	BN-07916-27326	18	BN-1C010-13110	12
BN-01754-50820	13	BN-04611-00620	15	BN-07916-27326	20	BN-1C010-13120	12
BN-01754-50820	14	BN-04612-00160	12	BN-07916-27326	20A	BN-1C010-13150	1
BN-01754-50820	24	BN-04612-00200	24	BN-07916-27326	24	BN-1C010-13150	12
BN-01754-50820	24	BN-04612-00300	15	BN-07916-27326	26	BN-1C010-13160	1
BN-01754-50825	18	BN-04613-50030	26	BN-07916-27336	2	BN-1C010-13160	12
BN-01754-50825	22	BN-04613-50040	26	BN-07916-27336	3	BN-1C010-13240	12
BN-01754-50825	31	BN-04613-50050	26	BN-07916-27336	5	BN-1C010-13482	12
BN-01754-50830	17	BN-04613-50120	25	BN-07916-27336	6	BN-1C010-13490	12
BN-01754-50840	19	BN-04717-01200	18	BN-07916-27336	7	BN-1C010-14020	12
BN-01754-50845	18	BN-04717-01600	18	BN-07916-27336	10	BN-1C010-14050	12
BN-01754-50850	11	BN-04724-00170	3	BN-07916-27336	15	BN-1C010-14150	12
BN-01754-50850	18	BN-04724-00200	2	BN-07916-27336	16	BN-1C010-14280	12
BN-01754-50850	18	BN-04811-10070	25	BN-07916-27336	17	BN-1C010-14350	12
BN-01754-50855	6	BN-04811-50300	10	BN-07916-27336	22	BN-1C010-14430	12
BN-01754-50855	11	BN-04811-50300	16	BN-07916-27336	24	BN-1C010-14500	10
BN-01754-50865	13	BN-04814-00090	9	BN-07916-27336	25	BN-1C010-14520	1
BN-01754-50870	24	BN-04814-00200	2	BN-07916-27336	26	BN-1C010-14520	10
BN-01754-50875	6	BN-04814-00200	6	BN-08101-06203	24	BN-1C010-15110	11
BN-01754-50875	15	BN-04814-00220	2	BN-08103-06206	15	BN-1C010-16012	11
BN-01754-50875	24	BN-04814-00220	7	BN-08143-06302	5	BN-1C010-16170	24
BN-01754-50880	17	BN-04814-00240	2	BN-08153-06304	24	BN-1C010-16172	24
BN-01774-51004	7	BN-04814-00240	6	BN-09318-88200	16	BN-1C010-16210	24
BN-01774-51014	7	BN-04814-00420	2	BN-09318-88200	18	BN-1C010-16220	2
BN-01774-51030	3	BN-04814-00420	17	BN-09661-40100	20A	BN-1C010-16220	24
BN-01774-51030	27	BN-04814-10070	2	BN-09661-40170	20	BN-1C010-16270	11
BN-01774-51035	29	BN-04814-10070	25	BN-09661-40170	20A	BN-1C010-16512	11
BN-01774-51060	12	BN-04817-00060	28	BN-09661-40170	20A	BN-1C010-21310	4
BN-01774-51065	31	BN-04817-00160	2	BN-09661-70150	22	BN-1C010-21980	4
BN-01774-51230	5	BN-04817-50300	1	BN-09661-70550	27	BN-1C010-22140	4
BN-01774-61020	20	BN-04817-50300	2	BN-09661-70625	27	BN-1C010-23530	4
BN-01774-61020	20A	BN-04817-50300	10	BN-09661-70675	22	BN-1C010-23540	4
BN-01779-51445	5	BN-04817-50300	16	BN-1C010-01010	3	BN-1C010-23950	4
BN-02056-50060	25	BN-05012-00512	24	BN-1C010-01019	3	BN-1C010-23960	4
BN-02056-50060	26	BN-05012-00609	24	BN-1C010-01123	3	BN-1C010-23970	4
BN-02556-50050	26	BN-05012-00614	24	BN-1C010-01503	7	BN-1C010-23980	4

PARTS NUMBER INDEX

PART No.	FIG.NO.	PART No.	FIG.NO.	PART No.	FIG.NO.	PART No.	FIG.NO.
BN-1C010-24012	11	BN-1C010-53000	21	BN-1C010-72922	1	BN-1C025-51650	24
BN-1C010-24022	11	BN-1C010-53010	21	BN-1C010-72922	18	BN-1C040-05131	1
BN-1C010-24112	4	BN-1C010-53170	21	BN-1C010-73010	18	BN-1C040-17101	1
BN-1C010-24250	11	BN-1C010-53610	20	BN-1C010-73030	17	BN-1C040-17111	1
BN-1C010-24360	11	BN-1C010-53610	20A	BN-1C010-73060	17	BN-1G031-54210	26
BN-1C010-24370	11	BN-1C010-53610	21	BN-1C010-73066	17	BN-1G371-83060	15
BN-1C010-24370	11	BN-1C010-53710	20	BN-1C010-73270	1	BN-1G373-63010	29
BN-1C010-24520	11	BN-1C010-53710	20A	BN-1C010-73270	18	BN-1G373-63010	30
BN-1C010-24982	11	BN-1C010-53720	20	BN-1C010-73350	18	BN-1G373-63030	30
BN-1C010-32110	7	BN-1C010-53720	20A	BN-1C010-73430	2	BN-1G373-63040	30
BN-1C010-32280	16	BN-1C010-53730	20	BN-1C010-73430	17	BN-1G373-63580	29
BN-1C010-32290	16	BN-1C010-53730	20A	BN-1C010-74282	31	BN-1G521-83220	15
BN-1C010-32292	16	BN-1C010-53740	20	BN-1C010-91010	31	BN-1G522-72700	18
BN-1C010-32880	24	BN-1C010-53740	20A	BN-1C010-91020	10	BN-1G522-72704	18
BN-1C010-33320	15	BN-1C010-53900	20	BN-1C010-91050	32	BN-1G522-83060	15
BN-1C010-33640	3	BN-1C010-53900	20A	BN-1C010-91100	7	BN-1G522-83190	15
BN-1C010-33650	3	BN-1C010-53900	21	BN-1C010-92010	32	BN-1G541-97010	31
BN-1C010-35070	6	BN-1C010-54120	26	BN-1C010-92020	26	BN-1K011-36410	9
BN-1C010-35130	6	BN-1C010-54150	26	BN-1C010-92080	32	BN-1K011-36500	9
BN-1C010-35630	4	BN-1C010-55140	24	BN-1C010-93010	32	BN-1K011-42010	22
BN-1C010-36422	9	BN-1C010-55770	2	BN-1C010-94510	25	BN-1K011-42020	27
BN-1C010-36550	9	BN-1C010-55770	26	BN-1C010-96010	3	BN-1K011-43060	27
BN-1C010-36920	6	BN-1C010-56030	26	BN-1C010-96020	6	BN-1K011-43140	27
BN-1C010-36922	6	BN-1C010-56150	26	BN-1C010-96160	3	BN-1K011-43200	27
BN-1C010-36950	6	BN-1C010-56750	25	BN-1C010-96960	2	BN-1K011-43280	27
BN-1C010-36960	6	BN-1C010-57150	25	BN-1C010-96960	15	BN-1K011-43890	27
BN-1C010-37010	16	BN-1C010-57510	25	BN-1C011-12231	1	BN-1K011-52030	22
BN-1C010-37110	3	BN-1C010-57512	25	BN-1C011-21050	4	BN-1K011-57562	15
BN-1C010-37110	17	BN-1C010-57620	25	BN-1C011-21090	4	BN-1K011-73260	18
BN-1C010-37110	18	BN-1C010-57700	25	BN-1C011-21110	4	BN-1K011-74110	19
BN-1C010-37114	3	BN-1C010-57920	26	BN-1C011-21910	4	BN-1K011-74150	19
BN-1C010-37114	17	BN-1C010-60014	25	BN-1C011-26300	8	BN-1K011-74250	19
BN-1C010-37114	18	BN-1C010-60150	25	BN-1C011-26302	8	BN-1K012-04460	5
BN-1C010-37150	16	BN-1C010-63020	30	BN-1C011-26400	8	BN-1K012-04610	5
BN-1C010-37160	16	BN-1C010-63170	30	BN-1C011-26402	8	BN-1K012-11630	14
BN-1C010-37172	16	BN-1C010-63240	30	BN-1C011-26970	8	BN-1K012-11640	14
BN-1C010-37182	16	BN-1C010-63250	30	BN-1C011-26980	8	BN-1K012-11740	14
BN-1C010-42400	20	BN-1C010-63260	30	BN-1C011-26990	8	BN-1K012-24010	11
BN-1C010-42400	20A	BN-1C010-63270	30	BN-1C011-43331	2	BN-1K012-24020	11
BN-1C010-42400	20A	BN-1C010-63330	30	BN-1C020-03310	1	BN-1K012-24250	11
BN-1C010-42460	20A	BN-1C010-63410	30	BN-1C020-03310	9	BN-1K012-24260	11
BN-1C010-42500	20	BN-1C010-63520	30	BN-1C020-03600	9	BN-1K012-24360	11
BN-1C010-42500	20A	BN-1C010-64010	31	BN-1C020-03610	9	BN-1K012-24370	11
BN-1C010-50800	24	BN-1C010-64010	32	BN-1C020-04140	2	BN-1K012-25010	5
BN-1C010-51060	23	BN-1C010-64020	32	BN-1C020-04140	6	BN-1K012-25012	5
BN-1C010-51152	24	BN-1C010-64060	32	BN-1C020-13460	12	BN-1K012-42020	27
BN-1C010-51170	24	BN-1C010-64080	32	BN-1C020-14310	12	BN-1K012-42030	22
BN-1C010-51174	24	BN-1C010-64110	32	BN-1C020-16320	24	BN-1K012-42360	20A
BN-1C010-51180	2	BN-1C010-64120	32	BN-1C020-22014	4	BN-1K012-43010	27
BN-1C010-51180	24	BN-1C010-64310	32	BN-1C020-22312	4	BN-1K012-43012	27
BN-1C010-51320	23	BN-1C010-64420	31	BN-1C020-22962	4	BN-1K012-43200	27
BN-1C010-51620	15	BN-1C010-64600	32	BN-1C020-22972	4	BN-1K012-43800	27
BN-1C010-51650	24	BN-1C010-64770	32	BN-1C020-23012	4	BN-1K012-50050	22
BN-1C010-51660	2	BN-1C010-64780	32	BN-1C020-23470	4	BN-1K012-50050	24
BN-1C010-51660	24	BN-1C010-64850	32	BN-1C020-23910	4	BN-1K012-50050	25
BN-1C010-52110	22	BN-1C010-65560	20	BN-1C020-23920	4	BN-1K012-50050	26
BN-1C010-52130	2	BN-1C010-65560	20A	BN-1C020-32430	16	BN-1K012-50056	24
BN-1C010-52130	24	BN-1C010-72810	18	BN-1C020-42360	20A	BN-1K012-50056	25
BN-1C010-53000	20	BN-1C010-72820	1	BN-1C020-55050	25	BN-1K012-50056	26
BN-1C010-53000	20A	BN-1C010-72820	18	BN-1C020-55452	25	BN-1K012-50057	24

PARTS NUMBER INDEX

PART No.	FIG.NO.	PART No.	FIG.NO.	PART No.	FIG.NO.	PART No.	FIG.NO.
BN-1K012-50057	25	BN-14601-98460	23	BN-15471-96650	1	BN-15841-98650	21
BN-1K012-50057	26	BN-14601-98470	23	BN-15471-96650	2	BN-15841-98660	21
BN-1K012-50800	24	BN-14601-98480	23	BN-15471-96650	15	BN-15841-98670	21
BN-1K012-51010	22	BN-14601-98490	23	BN-15521-14230	12	BN-15841-98680	21
BN-1K012-51010	23	BN-14611-51200	23	BN-15521-14230	12	BN-15841-98690	21
BN-1K012-51012	22	BN-14611-51250	23	BN-15521-96020	3	BN-15841-98700	21
BN-1K012-51012	23	BN-14611-51440	23	BN-15521-96020	9	BN-15841-98710	21
BN-1K012-51050	23	BN-14911-42750	22	BN-15531-39010	3	BN-15841-98720	21
BN-1K012-53890	20	BN-14971-42750	20	BN-15601-15550	11	BN-15841-98730	21
BN-1K012-53890	20A	BN-14971-42750	20A	BN-15601-96650	1	BN-15841-98740	21
BN-1K012-54260	24	BN-14971-42750	20A	BN-15601-96650	2	BN-15841-98750	21
BN-1K012-55100	25	BN-14971-42750	20A	BN-15601-96650	26	BN-15841-98760	21
BN-1K012-55105	25	BN-15000-36080	18	BN-15602-63820	5	BN-15841-98770	21
BN-1K012-56020	25	BN-15021-14240	12	BN-15625-32893	2	BN-15841-98780	21
BN-1K012-56410	26	BN-15021-14240	12	BN-15707-33360	15	BN-15841-98790	21
BN-1K012-56412	26	BN-15021-33660	1	BN-15707-33750	7	BN-15841-98800	21
BN-1K012-56480	26	BN-15021-33660	2	BN-15831-43100	28	BN-15841-98810	21
BN-1K012-57150	25	BN-15021-33660	3	BN-15831-43110	28	BN-15841-98820	21
BN-1K012-58570	25	BN-15021-33660	24	BN-15831-43250	28	BN-15841-98830	21
BN-1K012-63010	29	BN-15021-33660	26	BN-15831-43353	28	BN-15841-98840	21
BN-1K012-63010	30	BN-15108-57280	26	BN-15831-43380	28	BN-15841-98850	21
BN-1K012-63030	30	BN-15109-33661	1	BN-15831-43930	28	BN-15841-98860	21
BN-1K012-63040	30	BN-15221-03370	9	BN-15831-87462	28	BN-15841-98870	21
BN-1K012-63050	30	BN-15221-03380	3	BN-15841-53160	21	BN-15841-98880	21
BN-1K012-63070	30	BN-15221-03380	3	BN-15841-53230	21	BN-15841-98890	21
BN-1K012-63080	30	BN-15221-03390	3	BN-15841-53230	21	BN-15841-98900	21
BN-1K012-63200	30	BN-15221-03490	9	BN-15841-53350	21	BN-15841-98910	21
BN-1K012-63210	30	BN-15221-13240	12	BN-15841-53622	1	BN-15841-98920	21
BN-1K012-63280	30	BN-15221-13280	12	BN-15841-53622	20	BN-15852-33140	10
BN-1K012-63320	30	BN-15221-13330	12	BN-15841-53622	20A	BN-15852-33140	16
BN-1K012-63370	30	BN-15221-13980	12	BN-15841-53850	20	BN-16221-54420	15
BN-1K012-63380	30	BN-15221-14430	25	BN-15841-53850	20A	BN-16241-05550	10
BN-1K012-63390	30	BN-15221-33610	3	BN-15841-53860	20	BN-16241-05550	13
BN-1K012-63760	30	BN-15221-33650	3	BN-15841-53860	20	BN-16241-05550	17
BN-1K012-83190	15	BN-15221-51030	23	BN-15841-53860	20A	BN-16241-13330	12
BN-1K012-83220	15	BN-15221-51070	23	BN-15841-53860	20A	BN-16241-13540	12
BN-12234-67580	9	BN-15221-51240	23	BN-15841-54100	26	BN-16241-14240	12
BN-12234-67580	13	BN-15221-51270	23	BN-15841-54220	26	BN-16241-33510	10
BN-12331-95230	24	BN-15221-51280	23	BN-15841-54260	26	BN-16241-96020	17
BN-13901-91020	24	BN-15221-51290	23	BN-15841-54270	15	BN-16241-96020	18
BN-14109-51300	23	BN-15221-51382	23	BN-15841-92020	26	BN-16241-96020	18
BN-14109-51300	23	BN-15221-51490	23	BN-15841-92030	21	BN-16264-52140	2
BN-14301-42750	22	BN-15221-56280	25	BN-15841-92330	26	BN-16264-52140	22
BN-14301-42750	27	BN-15221-91530	9	BN-15841-94040	21	BN-16264-83342	6
BN-14301-43290	27	BN-15221-91530	13	BN-15841-96020	9	BN-16264-88131	2
BN-14311-60504	22	BN-15231-43283	28	BN-15841-98100	21	BN-16271-43570	28
BN-14601-98300	23	BN-15261-03370	3	BN-15841-98510	21	BN-16271-43580	28
BN-14601-98310	23	BN-15261-03370	3	BN-15841-98520	21	BN-16271-43590	28
BN-14601-98320	23	BN-15261-13360	12	BN-15841-98530	21	BN-16299-33672	1
BN-14601-98330	23	BN-15261-92020	26	BN-15841-98540	21	BN-16415-51220	23
BN-14601-98340	23	BN-15261-96010	9	BN-15841-98550	21	BN-16415-65510	20
BN-14601-98350	23	BN-15321-25163	5	BN-15841-98560	21	BN-16415-65512	20A
BN-14601-98370	23	BN-15401-95690	22	BN-15841-98570	21	BN-16415-83040	18
BN-14601-98380	23	BN-15401-96650	23	BN-15841-98580	21	BN-16454-51230	23
BN-14601-98390	23	BN-15451-96670	2	BN-15841-98590	21	BN-16475-51610	23
BN-14601-98410	23	BN-15451-96670	6	BN-15841-98600	21	BN-16475-53280	21
BN-14601-98420	23	BN-15451-96670	7	BN-15841-98610	21	BN-16683-96020	3
BN-14601-98430	23	BN-15471-01740	9	BN-15841-98620	21	BN-17208-42030	20A
BN-14601-98440	23	BN-15471-57920	25	BN-15841-98630	21	BN-17321-13560	12
BN-14601-98450	23	BN-15471-57980	25	BN-15841-98640	21	BN-17371-95800	15

PARTS NUMBER INDEX

PART No.	FIG.NO.	PART No.	FIG.NO.	PART No.	FIG.NO.	PART No.	FIG.NO.
BN-19077-53650	1						
BN-19077-53650	20						
BN-19077-53650	20A						
BN-19202-91010	25						
BN-19202-96830	24						
BN-35466-74460	14						
BN-6C040-82690	30						
BN-68849-66430	5						

No.PE-V3300-BF-TCM-1C

2001年12月　発行
2003年８月　改訂
2003年10月　改訂

TCM株式会社
本　社　　大阪市西区京町堀１－１５－１０
発　行　ＴＣＭテクノ株式会社

ISSUED : December, 2001
REVISED : August, 2003
REVISED : October, 2003

TCM CORPORATION
INTERNATIONAL MARKETING DIVISION: 1-15-5, Nishi-shimbashi, Minato-ku, Tokyo
105-0003, Japan
FAX: Japan +81-3-35918152, 3-35918153

無断で転載・複製を禁ず
All rights reserved.

I-0310001(H) Printed in Japan

TCM株式会社